VESTEL CHASSIS 11AK37

MODEL

SERVICE MANUAL

CONTENTS

SAFETY PRECAUTIONS: 2
TV set switched off 2
Measurements 2
PERI-TV SOCKET 2
SCART 1 2
SCART 2 2
1. INTRODUCTION 2
2. SMALL SIGNAL PART WITH STV2248 3
2.1 Vision IF amplifier 3
2.2 QSS Sound circuit (QSS versions) 3
2.3 FM demodulator and audio amplifier (mono versions) 3
2.4 Video switch 3
2.5 Synchronisation circuit 3
2.6 Chroma and luminance processing 4
2.7 RGB output circuit 4
2.8 µ-Controller 4
3. TUNER 5
4- MULTISTANDARD SOUND PROCESSOR 5
5. SOUND OUTPUT STAGE TDA7269A 5
6. VERTICAL OUTPUT STAGE WITH STV9306 5-6
7. VIDEO OUTPUT AMPLIFIER STV5112 6
8. POWER SUPPLY (SMPS) 6
9. POWER FACTOR CORRECTION 6
10. SERIAL ACCESS CMOS 8K EEPROM 24C08 6
11. CLASS AB STEREO HEADPHONE DRIVER TDA1308 6
12. CLASS AB MONO SUBWOOFER DRIVER TDA7261 6
13. SAW FILTERS 6
14. IC DESCRIPTIONS AND INTERNAL BLOCK DIAGRAM 6
• ST92195 7
• STV224X 7-8
• UV1315, UV1316, UV1336 8-9
• TDA7269A 10
• STV9306 10
• STV5112 11
• MC44608 11
• MSP 34XXG 12
• 24C08 12-13
• TDA1308 13
• TDA7261 13
• SAW FILTERS 14
15.CIRCUIT DESCCIRIPTION 15-19
16.AK37 CHASSIS MANUAL ADJUSTMENT PROCEDURE 20-22
17.OPTION SETTING 23-25
18.TUNER SETTING 26
19.GENERAL BLOCK DIAGRAM of CHASSIS 11AK37 27
20.AK37 / TITANIUM - Languages Groups 28
21.AK37 PROJECT BLOCK DIAGRAMS 29
21.1 BLOCK DIAGRAM 30
21.2 SMPS BLOCK DIAGRAM 31
21.3 MICRO CONTROLLER BLOCK DIAGRAM 32
21.4 VIDEO BLOCK DIAGRAM 33
21.5 STEREO BLOCK DIAGRAM 34
21.6 SCART BLOCK DIAGRAM 35
21.7 DEFLECTIOAN BLOCK DIAGRAM 36
21.8 BASE BOADR BLOCK DIAGRAM 37
22. CIRCUIT DIAGRAMS 38
22.1 SMPS CIRCUIT DIAGRAM 38
22.2 MICRO CONTROLLER CIRCUIT DIAGRAM 39
22.3 VIDEO CIRCUIT DIAGRAM 40
22.4 STEREO CIRCUIT DIAGRAM 41
22.5 SCART CIRCUIT DIAGRAM 42
22.6 BASE BOARD CIRCUIT DIAGRAM 43
22.7 CRT BOARD CIRCUIT DIAGRAM 44

DO NOT CHANGE ANY MODULE UNLESS THE SET IS SWITCH OFF
The mains supply side of the switch mode power supply transformer is live.
Use an isolating transformer.
The receivers fulfill completely the safety requirements.

Safety precautions:
Servicing of this TV should only be carried out by a qualified person. Components marked with the warning symbol on the circuit diagram are critical for safety and must only be replaced with an identical component.
- Power resistor and fusable resistors must be mounted in an identical manner to the original component.

TV Set switched off:
Make short-circuit between HV-CRT clip and CRT ground layer.
Short C809 before changing IC800 end IC801 or other components in primary side of SMPS part.

Measurements:
Voltage readings and oscilloscope traces are measured under following conditions.
Antenna signal's level is 60dB at the color bar pattern from the TV pattern generator.(100% white,75% colour saturation)
Brightness, contrast, and color are adjusted for normal picture perfomance.
Mains supply, 220VAC, 50Hz.

PERI-TV SOCKET

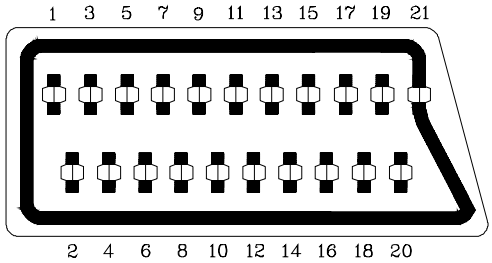

SCART 1 PINING

1	Audio right output	0.5Vrms / 1K
2	Audio right input	0.5Vrms / 10K
3	Audio left output	0.5Vrms / 1K
4	Ground AF	
5	Ground Blue	
6	Audio left input	0.5Vrms / 10K
7	Blue input	0.7Vpp / 75ohm
8	AV switching input	0-12VDC /10K
9	Ground Green	
10	-	
11	Green input	0.7Vpp / 75ohm
12	-	
13	Ground Red	
14	Ground Blanking	
15	Red input	0.7Vpp / 75ohm
16	Blanking input	0-0.4VDC, 1-3VDC / 75ohm
17	Ground CVBS output	
18	Ground CVBS input	
19	CVBS output	1Vpp / 75ohm
20	CVBS input	1Vpp / 75ohm
21	Ground	

SCART 2 PINING

1	Audio right output	0.5Vrms / 1K
2	Audio right input	0.5Vrms / 10K
3	Audio left output	0.5Vrms / 1K
4	Ground AF	
5	Ground Blue	
6	Audio left input	0.5Vrms / 10K
7	Blue input	
8	AV switching input	0-12VDC /10K
9	Ground Green	
10	-	
11	-	
12	-	
13	Ground Red	
14	Ground Blanking	
15	-	
16	-	
17	Ground CVBS output	
18	Ground CVBS input	
19	CVBS output	1Vpp / 75ohm
20	CVBS input	1Vpp / 75ohm
21	Ground	

1. INTRODUCTION

11AK37 is a 110° chassis capable of driving 25", 28", 29", 33" 4:3 and 28", 32" 16:9 tubes at the appropriate currents. The chassis is capable of operating in PAL, SECAM and NTSC standards and multiple transmission standards as B/G, D/K, I/I', and L/L´. standards. The sound system is capable of giving 12 watts RMS output into a load of 8 ohms.
One page, 7 page SIMPLETEXT, TOPTEXT, FASTTEXT and US Closed Caption is also provided. The chassis is equipped with a double-deck 42 pin scart connector for AV input/output, front-AV input, one back-AV output, one SVHS, one headphone and one subwoofer.

2. SMALL SIGNAL PART WITH STV2248:

STV2248 video processor is essential for realizing all small signal functions for a color TV receiver.

2.1 Vision IF amplifier

The vision IF amplifier can demodulate signals with positive and negative modulation. The PLL demodulator is completely alignment-free. Although the VCO (Toko-coil) of the PLL circuit is external, yet the frequency is fixed to the required value by the original manufacturer thus the Toko-coil does not need to be adjusted manually. The setting of the various frequencies (38.9 or 45.75 MHz) can be made via changing the coil itself

2.2 QSS Sound circuit (QSS versions)

The sound IF amplifier is similar to the vision IF amplifier and has an external AGC de-coupling capacitor. The single reference QSS mixer is realised by a multiplier. In this multiplier the SIF signal is converted to the inter-carrier frequency by mixing it with the regenerated picture carrier from the VCO. The mixer output signal is supplied to the output via a high-pass filter for attenuation of the residual video signals. With this system a high performance hi-fi stereo sound processing can be achieved. The AM sound demodulator is realised by a multiplier. The modulated sound IF signal is multiplied in phase with the limited SIF signal. The demodulator output signal is supplied to the output via a low-pass filter for attenuation of the carrier harmonics. The AM signal is supplied to the output via the volume control.

The AM demodulated signal results from multiplying the input signal by itself, it is available on AM/FM output.

2.3 FM demodulator and audio amplifier (mono versions):

The FM demodulator is realized as narrow-band PLL with external loop filter, which provides the necessary selectivity without using an external band-pass filter. To obtain a good selectivity a linear phase detector and constant input signal amplitude are required. For this reason the inter-carrier signal is internally supplied to the demodulator via a gain controlled amplifier and AGC circuit. The nominal frequency of the demodulator is tuned to the required frequency (4.5/5.5/6.0/6.5 MHz) by means of a calibration circuit that uses the clock frequency of the µ-controller/Teletext decoder as a reference. The setting to the wanted frequency is realized by means of the software. It can be read whether the PLL frequency is inside or outside the window and whether the PLL is in lock or not. With this information it is possible to make an automatic search system for the incoming sound frequency. This is realized by means of a software loop that alternate the demodulator to various frequencies, then select the frequency on which a lock condition has been found. De-emphasis output signal amplitude is independent of the TV standard and has the same value for a frequency deviation of ±25 kHz at the 4.5 MHz standard and for a deviation of ±50 kHz for the other standards. When the IF circuit is switched to positive modulation the internal signal on de-emphasis pin is automatically muted. The audio control circuit contains an audio switch and volume control. In the mono inter-carrier sound versions the Automatic Volume Leveling (AVL) function can be activated. The pin to which the external capacitor has to be connected depends on the IC version.

2.4 Video switching

The video processor (STV2248C) has three CVBS inputs and two RGB inputs. The first CVBS input is used for external CVBS from SCART 1, the second is used for either CVBS or Y/C from either SCART2 or BAV/FAV or SVHS, and the third one is used for internal video. The selection between both external video inputs signals is realized by means of software and hardware switches.

2.5 Synchronization circuit

The video processor (STV224X) performs the horizontal and vertical processing. The external horizontal deflection circuit is controlled via the Horizontal output pulse (HOUT). The vertical scanning is performed through an external ramp generator and a vertical power amplifier IC controlled by the Vertical output pulse (VOUT).

The main components of the deflection circuit are:

- PLL1: the first phase locked loop that locks the internal line frequency reference on the CVBS input signal. It is composed of an integrated VCO (12 MHz) that requires the chroma reference frequency (4.43MHz or 3.58MHz crystal oscillator reference signal), a divider by 768, a line decoder, and a phase comparator.
- PLL2: The second phase locked loop that controls the phase of the horizontal output (Compensation of horizontal deflection transistor storage time variation). Also the horizontal position adjustment is also performed in PLL2.
- A vertical pulse extractor.
- A vertical countdown system to generate all vertical windows (vertical synchronization window, frame blanking pulses, 50/60Hz identification window...).
- Automatic identification of 50/60Hz scanning.
- PLL1 time constant control.
- Noise detector, video identification circuits, and horizontal coincidence detector.
- Vertical output stage including de-interlace function, vertical position control.
- Vertical amplitude control voltage output (combined with chroma reference output and Xtal 1 indication).

2.6 Chroma and luminance processing:

The chroma decoder is able to demodulate PAL, NTSC and SECAM signals.
The decoder dedicated to PAL and NTSC sub-carrier is based on a synchronous demodulator, and an Xtal PLL locked on the phase reference signal (burst).
The SECAM demodulation is based on a PLL with automatic calibration loop.
The color standard identification is based on the burst recognition.
Automatic and forced modes can be selected through the I ^{2}C bus.
NTSC tint, and auto flesh are controlled through I ^{2}C bus.
Xtal PLL can handle up to 3 crystals to work in PAL M, PAL N and NTSC M for South America.
ACC an ACC overload control the chroma sub-carrier amplitude within 26dB range. Both
ACC s are based on digital systems and do not need external capacitor.
All chroma filters are fully integrated and tuned via a PLL locked on Xtal VCO signal.
A second PLL is used for accurate fine-tuning of the SECAM bell filter. This tuning is achieved during the frame blanking.
An external capacitor memorizes the bell filter tuning voltage.
A base-band chroma delay-line rebuilds the missing color line in SECAM and removes transmission phase errors in PAL.
The base-band chroma delay line is clocked with 6MHz signal provided by the horizontal scanning VCO.
The luminance processor is composed of a chroma trap filter, a luminance delay line, a peaking function with noise coring feature, a black stretch circuit.
Trap filter and luminance delay lines are achieved with the use of bi-quad integrated filters, auto-aligned via a master filter phase locked loop.

2.7 RGB output circuit:

The video processor performs the R, G, B processing.
There are three sources:

1. Y,U,V inputs (coming from luma part (Y output), and chroma decoder outputs (R-Y, B-Y outputs).
2. External R,G,B inputs from SCART (converted internally in Y,U,V), with also the possibility to input YUV signals from a DVD player, (YUV specification is Y=0.7 V PP , U= 0.7 V PP , V = 0.7V PP for 100% color bar).
3. Internal R,G,B inputs (for OSD and Teletext display)

The main functions of the video part are:

- Y,U,V inputs with integrated clamp loop, allowing a DC link with YUV outputs,
- External RGB inputs (RGB to YUV conversion), or direct YUV inputs,
- Y,U,V switches,
- Contrast, saturation, brightness controls,
- YUV to RGB matrix,
- OSD RGB input stages (with contrast control),
- RGB switches,
- APR function,
- DC adjustment of red and green channels,
- Drive adjustments (R, G, B gain),
- Digital automatic cut-off loop control,
- Manual cut-off capability with I ^{2}C adjustments,
- Half tone, oversize blanking, external insertion detection, blue screen,
- Blanking control and RGB output stages.

2.8 µ-Controller

The ST92195 is the micro-controller, which is required for a color TV receiver. ST92195D1 is the version with one page Teletext and ST92195D7 is the one with 7 page Teletext. The IC has the supply voltages of 5 V and they are mounted in PSDIP package with 56 pins.
µ-Controller has the following features

- Display of the program number, channel number, TV Standard, analogue values, sleep timer, parental control and mute is done by OSD
- Single LED for standby and on mode indication
- System configuration with service mode
- 3 level logic output for SECAM and Tuner band switching

3. TUNER

Either a PLL or a VST tuner is used as a tuner.
UV1316 (VHF/UHF) is used as a PLL tuner. For only PAL M/N, NTSC M applications UV 1336 is used as the PLL tuner.
UV 1315 (VHF/UHF) is used as a VST Tuner.

Channel coverage of UV1316:

BAND	OFF-AIR CHANNELS		CABLE CHANNELS	
	CHANNELS	FREQUENCY RANGE (MHz)	CHANNELS	FREQUENCY RANGE (MHz)
Low Band	E2 to C	48.25 to 82.25 (1)	S01 to S08	69.25 to 154.25
Mid Band	E5 to E12	175.25 to 224.25	S09 to S38	161.25 to 439.25
High Band	E21 to E69	471.25 to 855.25 (2)	S39 to S41	447.25 to 463.25

(1). Enough margin is available to tune down to 45.25 MHz.
(2). Enough margin is available to tune up to 863.25 MHz.

Noise	Typical	Max.	**Gain**	Min.	Typical	Max.
Low band	: 5dB	9dB	All channels	: 38dB	44dB	52dB
Mid band	: 5dB	9dB	Gain Taper (of-air channels)	:		8dB
High band	: 6dB	9dB				

Channel Coverage UV1336:

BAND	CHANNELS	FREQUENCY RANGE (MHz)
Low Band	2 to D	55.25 to 139.25
Mid Band	E to PP	145.25 to 391.25
High Band	QQQ to 69	397.25 to 801.25

Noise is typically 6dB for all channels. **Gain** is minimum 38dB and maximum 50dB for all channels.

Channel Coverage of UV1315:

BAND	OFF-AIR CHANNELS		CABLE CHANNELS	
	CHANNELS	FREQUENCY RANGE (MHz)	CHANNELS	FREQUENCY RANGE (MHz)
Low Band	E2 to C	48.25 to 82.25 (1)	S01 to S10	69.25 to 168.25
Mid Band	E5 to E12	175.25 to 224.25	S11 to S39	231.25 to 447.25
High Band	E21 to E69	471.25 to 855.25 (2)	S40 to S41	455.25 to 463.25

(1). Enough margin is available to tune down to 45.25 MHz.
(2). Enough margin is available to tune up to 863.25 MHz.

Noise	Typ.	Max.	**Gain**	Min.	Typ.	Max.
Low band	: 6dB	9dB	All Channels	: 38dB	44dB	50dB
Mid band	: 6dB	10dB	Gain Taper	:		8dB
High band	: 6dB	11dB	(off-air channels)			

4. MULTISTANDARD SOUND PROCESSOR

The MSP 34xxG is designed to perform demodulation of FM or AM-Mono TV sound. Three kinds of MSP's are used: MSP 3400G,MSP 3410G and MSP 3411G. The MSP 3400G is fully pin and software-compatible to the MSP 3410G, but is not able to decode NICAM. It is also compatible to the MSP 3411G,sound processor IC with virtual dolby sound.

5. SOUND OUTPUT STAGETDA7269A

The TDA7269A is a class AB dual Audio power amplifier, specially designed for high quality sound applications as Hi-Fi music centers and TV sets. It is supplied by ±12VDC coming from two separate windings in the SMPS transformer. It gives 2x14W(THD=10%) output power into an 8ohm load.

6. VERTICAL OUTPUT STAGE WITH STV9306

The STV9306 is a fully I^2C controlled vertical deflection IC designed for use in 110°, 4/3 or 16/9 CRT applications. It integrates both the vertical deflection and E/W correction circuitries necessary in design of a 110° chassis.

7. VIDEO OUTPUT AMPLIFIER STV5112

The STV5112 consists of three monolithic video output amplifiers. The amplifier can be seen as an operational amplifier with negative feedback. The advantage of negative feedback is that the amplifier characteristics do not play an important role up to certain frequencies. The internal flash diodes protect the amplifiers against flash over in the picture tube. The only protections required at the cathode outputs are a flash resistor and a spark gap. Furthermore, the device has a high voltage power supply (VDD) and a low voltage one (VCC).

8. POWER SUPPLY (SMPS)

The DC voltages required at various parts of the chassis are provided by an SMPS transformer controlled by the IC MC44608 which is designed for driving, controlling and protecting switching transistor of SMPS. The transformer produces 150V for FBT input, ±12V for audio output IC, +5V and +8V for ST92195.

9. POWER FACTOR CORRECTION

Passive components are used for the solution of power factor correction.

10. SERIAL ACCESS CMOS 8K EEPROM 24C08

The 24C08 is a 8Kbit electrically erasable programmable memory (EEPROM), organized as 4 blocks of 256*08 bits. The memory is compatible with the I²C standard, two wire serial interface which uses a bi-directional data bus and serial clock.

11. CLASS AB STEREO HEADPHONE DRIVER TDA1308

The TDA1308 is an integrated class AB stereo headphone driver contained in a DIP8 plastic package.

12. CLASS AB MONO SUBWOOFER DRIVER TDA7261

The TDA7261 is a class AB dual Audio power amplifier, specially designed for high quality sound applications in mono TV chassis. It is supplied by ±12VDC.

13. SAW FILTERS

Saw filter type	:	**Model:**
G1975M	:	PAL B/G MONO
K2966M	:	PAL SECAM B/G/D/K/I MONO
J1981	:	PAL-I MONO
K2958M	:	PAL-SECAM B/G-D/K (38) MONO
K2962M	:	PAL-SECAM B/G/D/K/I/L/L' MONO
L9653M	:	SECAM L/L' AM MONO (AUDIO IF)
G3967M	:	PAL-SECAM B/G STEREO (VIDEO IF)
G9353M	:	PAL-SECAM B/G STEREO (AUDIO IF)
K3958M	:	PAL-SECAM B/G/D/K/I/L/L' STEREO (VIDEO IF)
K9356M	:	PAL-SECAM B/G/D/K/I STEREO (AUDIO IF)
K9656M	:	PAL-SECAM B/G/D/K/I/L/L' STEREO (AUDIO IF)
K3958M	:	PAL I NICAM (VIDEO IF)
K9356M	:	PAL I NICAM (AUDIO IF)
M1962M	:	PAL M/N NTSC M MONO
M3953M	:	PAL M/N NTSC M STEREO (VIDEO IF)
M9370M	:	PAL M/N NTSC M STEREO (AUDIO IF)

IC DESCRIPTIONS AND INTERNAL BLOCK DIAGRAM

- ST92195
- STV224X
- TUNER (UV1315, UV1316, UV1336)
- TDA7269A
- STV9306
- STV5112
- MC44608
- MSP 34XXG
- 24C08
- TDA1308
- SAW FILTERS

G1975M, K2966M, K2962M, L9653M, G3962M, G9353M, K3958M, K9356M, K9656M, K6263K, K9652M, M1962M, M3953M, M9370M

ST92195

The ST92195 is a member of the ST9+ family of micro-controllers, completely developed and produced by SGS-THOMSON Microelectronics using a proprietary n-well HCMOS process. The nucleus of the ST92195 is the advanced Core, which includes the Central Processing Unit (CPU), the ALU, the Register File and the interrupt controller. The Core has independent memory and register buses to add to the efficiency of the code. A set of on-chip peripherals form a complete sys-tem for TV set and VCR applications:

- Voltage Synthesis
- VPS/WSS Slicer
- Teletext Slicer
- Teletext Display RAM
- OSD

Additional peripherals include a watchdog timer, a serial peripheral interface (SPI), a 16-bit timer and an A/D converter.

MICROCONTROLLER PIN DESCRIPTION

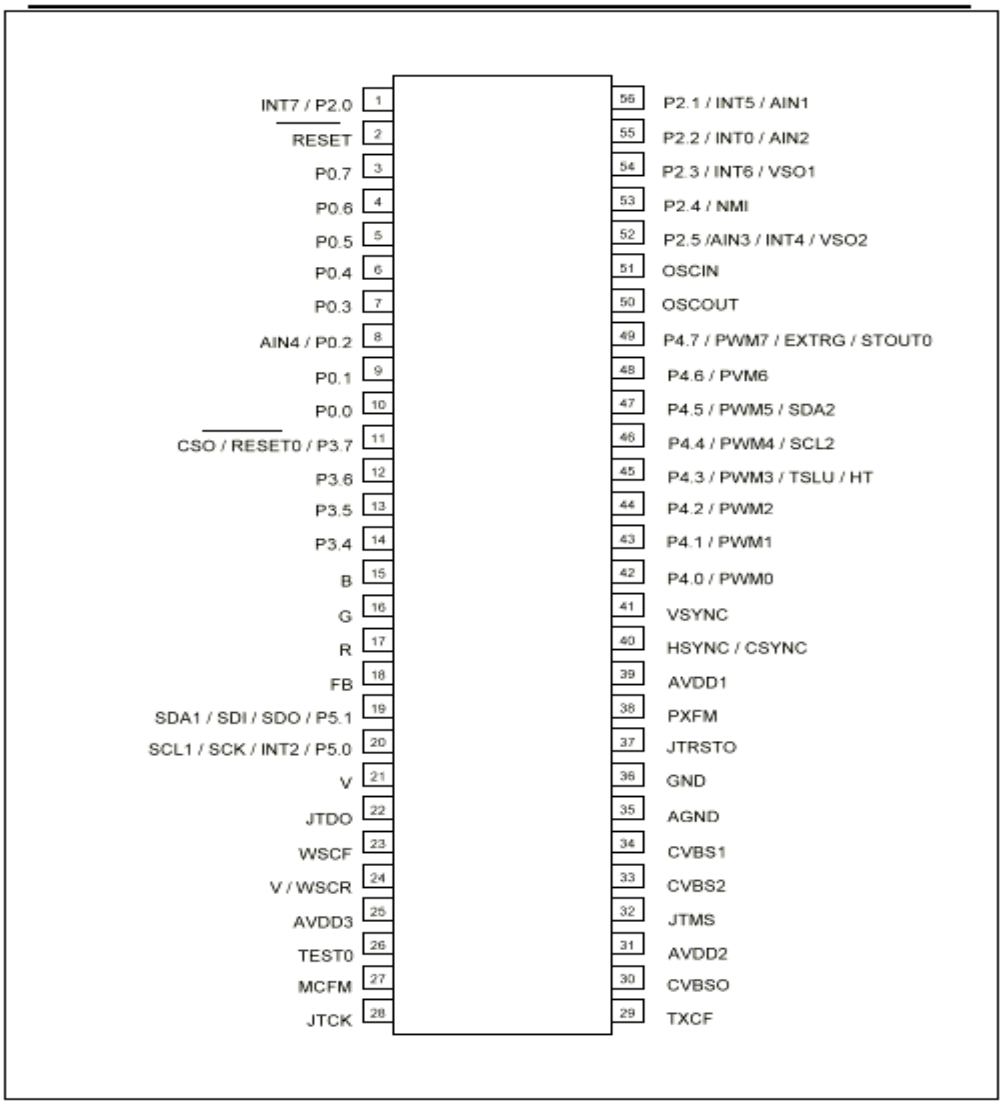

STV224X Video processor:

The STV2246/2247/2248 are fully bus controlled ICs for TV including PIF, SIF, luma, chroma and deflection processing. Used with a vertical frame booster (TDA1771 or TDA8174 for 90° chassis, STV9306 for 110° chassis), they allow the design of multi-standard (BGDKIMNLL, PAL/ SECAM/NTSC) sets with very few external components and no manual adjustments.

PIN CONNECTIONS STV224X/8X (SDIP56)

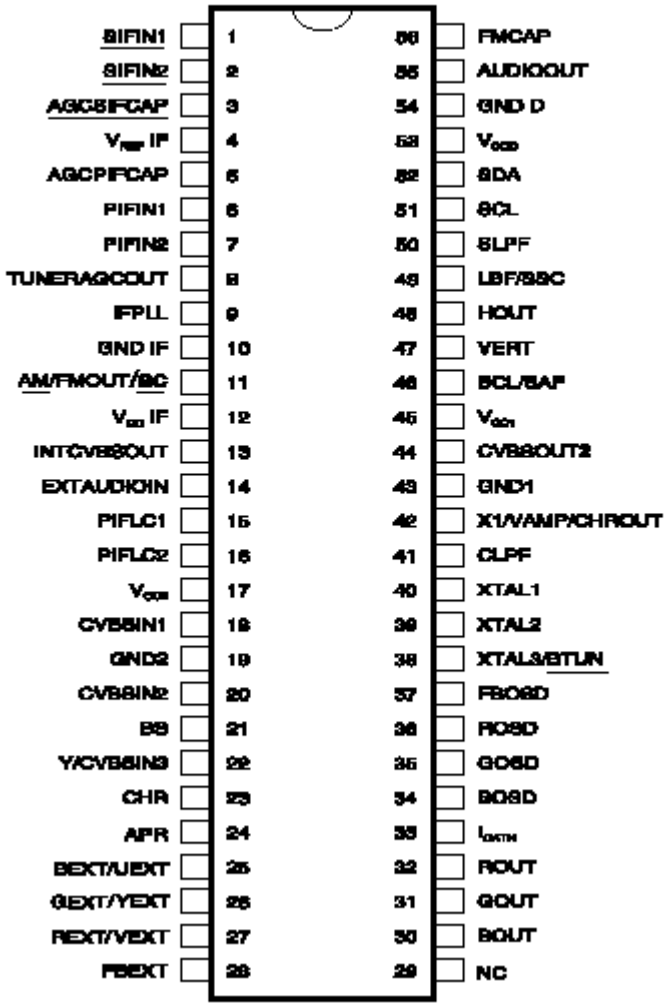

UV1315, UV1316, UV1336

General description of UV1315:

The UV1315 tuner belongs to the UV 1300 family of tuners, which are designed to meet a wide range of applications. It is a combined VHF, UHF tuner suitable for CCIR systems B/G, H, L, L', I and I'.

Features of UV1315:

- Member of the UV1300 family small sized UHF/VHF tuners
- Systems CCIR:B/G, H, L, L', I and I'; OIRT:D/K
- Voltage synthesized tuning (VST)
- Off-air channels, S-cable channels and Hyper-band
- Standardized mechanical dimensions and pinning

PINNING	PIN VALUE
1. Gain control voltage (AGC)	: 4.0V, Max:4.5V
2. Tuning voltage	
3. High band switch	: 5V, Min:4.75V, Max:5.5V
4. Mid band switch	: 5V, Min:4.75V, Max:5.5V
5. Low band switch	: 5V, Min:4.75V, Max:5.5V
6. Supply voltage	: 5V, Min:4.75V, Max:5.5V
7. Not connected	
8. Not connected	
9. Not connected	
10. Symmetrical IF output 1	
11. Symmetrical IF output 2	

Band switching table:

	PIN 3	PIN 4	PIN 5
LOW BAND	0 V	0 V	+ 5V
MID BAND	0 V	+ 5V	0 V
HIGH BAND	+ 5V	0 V	0 V

General description of UV1316:

The UV1316 tuner belongs to the UV 1300 family of tuners, which are designed to meet a wide range of applications. It is a combined VHF, UHF tuner suitable for CCIR systems B/G, H, L, L', I and I'.

Features of UV1316:

- Member of the UV1300 family small sized UHF/VHF tuners
- Systems CCIR: B/G, H, L, L', I and I'; OIRT: D/K
- Digitally controlled (PLL) tuning via I²C-bus
- Off-air channels, S-cable channels and Hyper-band
- World standardized mechanical dimensions and world standard pinning
- Complies to "CENELEC EN55020" and "EN55013"

PINNING	**PIN VALUE**
1. Gain control voltage (AGC)	: 4.0V, Max:4.5V
2. Tuning voltage	
3. I²C-bus address select	: Max:5.5V
4. I²C-bus serial clock	: Min:-0.3V, Max:5.5V
5. I²C-bus serial data	: Min:-0.3V, Max:5.5V
6. Not connected	
7. PLL supply voltage	: 5.0V, Min:4.75V, Max:5.5V
8. ADC input	
9. Tuner supply voltage	: 33V, Min:30V, Max:35V
10. Symmetrical IF output 1	
11. Symmetrical IF output 2	

General description of UV1336:

UV1336 series is developed for reception of channels broadcast in accordance with the M, N standard.

Features of UV1336:

- Global standard pinning
- Integrated Mixer-Oscillator & PLL function
- Conforms to CISPR 13, FCC and DOC (Canada) regulations
- Low power consumption
- Both phono connector and 'F' connector are available

PINNING	**PIN VALUE**
1. Gain control voltage	: 4.0V, Max:4.5V
2. Tuning voltage	
3. Address select	: Max:5.5V
4. Serial clock	: Min:-0.3V, Max:5.5V
5. Serial data	: Min:-0.3V, Max:5.5V
6. Not connected	
7. Supply voltage	: 5.0V, Min:4.75V, Max:5.5V
8. ADC input (optional)	
9. Tuning supply voltage	: 33V, Min:30V, Max:35V
10. Ground	
11. IF output	

TDA7269A

General Description of TDA7269A

The TDA7269A is a class AB dual Audio power amplifier, specially designed for high quality sound applications as Hi-Fi music centers and TV sets. Requires very few external components.

- Wide supply voltage range up to ±20V
- Split supply
- High output power; 14 + 14W @THD =10%, R_L =8W,V_S= ±16V
- No pop at turn-on/off
- Mute (Pop free)
- Stand-by feature
- Thermal overload protection
- Short circuit protection to gnd

PINNING

1.	- V_S
2.	Output1
3.	+ V_S
4.	Output2
5.	Mute
6.	- V_S
7.	In+(2)
8.	In-(2)
9.	Gnd
10.	In-(1)
11.	In+(1)

STV9306

General description:

The STV9306 is a fully I^2C controlled vertical deflection IC designed for use in 110°, 4/3 or 16/9 CRT applications. It integrates both the vertical deflection and E/W correction circuitries necessary in design of a 110° chassis.

FEATURES

- FULLY I^2C CONTROLLED
- DMOS POWER HALF-BRIDGE AMPLIFIER
- DC COUPLED OPERATION
- INTERNAL FLYBACK GENERATOR (UP TO 60V)
- SELF ADAPTED SAWTOOTH (50/60Hz)
- 100Hz OPERATION
- VERTICAL LINEARITY, AMPLITUDE AND CENTERING ADJUSTMENTS
- HORIZONTAL WIDTH, PINCUSHION, TRAPEZOID AND CORNER ADJUSTMENTS
- BREATHING CORRECTION
- 4/3, 16/9 CRT APPLICATION
- THERMAL PROTECTION
- LINEAR VERTICAL ZOOM FUNCTION
- E/W CLASS A OUTPUT
- LOW EXTERNAL COMPONENTS

PINNING

1.	SCL
2.	CRAMP
3.	SDA
4.	CHOLD
5.	SYNC
6.	Vs
7.	FLYBACK
8.	GND
9.	OUT
10.	VOPS
11.	EWOUT
12.	SENS2
13.	EWFB
14.	SENS1
15.	BREATHING

STV5112

General Description:

The STV5112 includes three video amplifiers designed with a high voltage bipolar/CMOS/DMOS technology (BCD). It drives directly the three cathodes and is protected against flashovers. Thanks to its three cathode current outputs, the STV5112 can be used with both parallel and sequential sampling applications.

Bandwidth : 8MHz TYPICAL
Supply Voltage : 220V typical
Rise and fall time : 50ns typical
CRT cathode current outputs for parallel or sequential cut-off or drive adjustment
Flashover protection
Power dissipation : 3.6W

PINNING	PIN VALUE
1.	BLUE INPUT
2.	VCC LOW VOLTAGE
3.	GREEN INPUT
4.	RED INPUT
5.	VDD HIGH VOLTAGE
6.	RED CATHODE CURRENT
7.	RED OUTPUT
8.	GROUND
9.	RED FEEDBACK
10.	GREEN OUTPUT
11.	GREEN CATHODE CURRENT
12.	GREEN FEEDBACK
13.	BLUE OUTPUT
14.	BLUE CATHODE
15.	BLUE FEEDBACK

MC44608

General description:

The MC44608 is a high performance voltage-mode controller designed for off–line converters. This high voltage circuit that integrates the start–up current source and the oscillator capacitor, requires few external components while offering a high flexibility and reliability.The device also features a very high efficiency stand–by management consisting of an effective Pulsed Mode operation. This technique enables the reduction of the stand–by power consumption to approximately 1W while delivering 300mW in a 150W SMPS.

- Integrated start–up current source
- Loss less off–line start–up
- Direct off–line operation
- Fast start–up

General Features

- Flexibility
- Duty cycle control
- On chip oscillator switching frequency 40, or 75kHz
- Secondary control with few external components

Protections

- Maximum duty cycle limitation
- Cycle by cycle current limitation
- Demagnetization (Zero current detection) protection
- “Over VCC protection” against open loop
- Programmable low inertia over voltage protection against open loop
- Internal thermal protection

GreenLine Controller

- Pulsed mode techniques for a very high efficiency low power mode
- Lossless startup
- Low dV/dT for low EMI radiations

PINNING	PIN VALUE
1. Demagnetization	Zero cross detection voltage: 50-mV typ.
2. I Sense	Over current protection voltage 1V typ.
3. Control Input	Min: 7.5V Max.: 18V
4. Ground	Iout $2A_{p-p}$ during scan $1.2A_{p-p}$ during flyback
5. Driver	Output resistor 8.5 Ohm sink 15 Ohm source typ.
6. Supply voltage	Max:16V (Operating range 6.6V-13V)
7. No connection	
8. Line Voltage	Min:50V Max:500V

MSP 34XXG

General description:

The MSP 34xxG family of single-chip Multi-standard Sound Processors covers the sound processing of all analog TV standards worldwide, as well as the NICAM digital sound standards. The full TV sound processing, starting with analog sound IF signal-in, down to processed analog AF-out, is performed on a single chip.

Two-carrier FM systems according to the German or Korean terrestrial specs or the satellite specs can be processed with the MSP 34x0G. Digital demodulation and decoding of NICAM-coded TV stereo sound, is done only by the MSP 3410G. The MSP 34x0G offers a powerful feature to calculate the carrier field strength, which can be used for automatic standard detection (terrestrial) and search algorithms (satellite).

The MSP 3411G has all functions of the MSP34x0G with the addition of a virtual surround sound feature. Surround sound can be reproduced to a certain extent with two loudspeakers. The MSP3411G includes our virtualizer algorithm "3D-PANORAMA" which has been approved by the Dolby Laboratories for compliance with the "Virtual Dolby Surround" technology. In addition, the MSP 34x1G includes our "PANORAMA" algorithm. The MSP34x1G has built-in automatic functions: The IC is able to detect the actual sound standard automatically (Automatic Standard Detection). Furthermore, pilot levels and identification signals can be evaluated internally with subsequent switching between mono/ stereo/ bilingual; no I^2C interaction is necessary (Automatic Sound Selection).

General Features

- Two selectable analog inputs (TV and SAT-IF sources)
- Automatic Gain Control (AGC) for analog IF input. Input range: 0.10–3 V pp
- Integrated A/D converter for sound-IF inputs
- All demodulation and filtering is performed on chip and is individually programmable
- Easy realization of all digital NICAM standards (B/G, D/K, I & L) with MSP 3410G.
- FM demodulation of all terrestrial standards (incl. identification decoding)
- FM demodulation of all satellite standards
- No external filter hardware is required
- Only one crystal clock (18.432 MHz) is necessary
- FM carrier level calculation for automatic search algorithms and carrier mute function
- Subwoofer output with on-chip programmable low-pass and complementary high-pass filters

DSP Section (Audio Base band Processing)

- Flexible selection of audio sources to be processed
- Two digital input and one output interface via I 2 S bus for external DSP processors, featuring surround sound, ADR etc.
- Digital interface to process ADR (ASTRA Digital Radio) together with DRP 3510A
- Performance of all de-emphasis systems including adaptive Wegener Panda1 without external components or controlling
- Digitally performed FM identification decoding and de-matrixing
- Digital base-band processing: volume, bass, treble, 5-band equalizer, loudness, pseudo-stereo, and base-width enlargement
- Simple controlling of volume, bass, treble, equalizer etc.

Analog Section

- four selectable analog pairs of audio base-band inputs (= four SCART inputs) input level: =<2 V RMS, input impedance: >=25 kW
- one analog mono input (i.e. AM sound): input level: =<2 V RMS , input impedance: >=15 kW
- two high-quality A/D converters, S/N-Ratio: >=85 dB
- 20 Hz to 20 kHz bandwidth for SCART-to-SCART copy facilities

24CO8

General description:

The 24C16 is a 8Kbit electrically erasable programmable memory (EEPROM), organized as 4 blocks of 256 * 08 bits. The memory operates with a power supply value as low as 2.5V.

Features:

- Minimum 1 million ERASE/WRITE cycles with over 10 years data retention
- Single supply voltage:4.5 to 5.5V
- Two wire serial interface, fully I^2C-bus compatible
- Byte and Multi-byte write (up to 8 bytes)
- Page write (up to 16 bytes)
- Byte, random and sequential read modes
- Self timed programming cycle

PINNING	PIN VALUE					
1. Write protect enable	: 0V					
2. Not connected	: 0V					
3. Chip enable input	: 0V					
4. Ground	: 0V					
5. Serial data address input/output	: Input LOW voltage	:	Min	: -0.3V,	Max :	0.3*Vcc
	: Input HIGH voltage	:	Min	: 0.7*Vcc,	Max :	Vcc+1
6. Serial clock	: Input LOW voltage	:	Min	: -0.3V,	Max :	0.3*Vcc
	: Input HIGH voltage	:	Min	: 0.7*Vcc,	Max :	Vcc+1
7. Multibyte/Page write mode	: Input LOW voltage	:	Min	: -0.3V,	Max :	0.5V
	: Input HIGH voltage	:	Min	: Vcc-0.5,	Max :	Vcc+1
8. Supply voltage	: Min	:	2.5V,		Max :	5.5V

TDA1308

Features:

- Wide temperature range
- Excellent power supply ripple rejection
- Low power consumption
- Short-circuit resistant
- High performance
- high signal-to-noise ratio
- low distortion

PINNING	PIN VALUE
1. Output A (Voltage swing)	: Min:0.75V, Max:4.25V
2. Inverting input A	: Vo(clip):Min:1400mVrms
3. Non-inverting input A	: 2.5V
4. Ground	: 0V
5. Non-inverting input B	: 2.5V
6. Inverting input B	: Vo(clip):Min:1400mVrms
7. Output B (Voltage swing)	: Min:0.75V, Max:4.25V
8. Positive supply	: 5V, Min:3.0V, Max:7.0V

TDA7261

General Description of TDA7261

The TDA7261 is a class AB dual Audio power amplifier, specially designed for high quality sound applications in mono TV sets.

- Wide supply voltage range up to 50V ABS max.
- Split supply
- High output power;25W @THD =10%, R_L =8W,V_S= ±20V
- No pop at turn-on/off
- Mute (Pop free)
- Stand-by feature
- Thermal overload protection
- Short circuit protection to gnd

PINNING

1. N.C.
2. + V_S
3. Output
4. Mute/Stby
5. - V_S
6. In
7. GND
8. N.C.

Saw filter's list:

		VIDEO	AUDIO
MONO	PAL BG	G1975M	
	PSBG DK'	K2966M	
	PAL I'	J1981	
	PSBGDKK' I'	K2966M	
	PSBGDKK' LL'	K2962M	L9653

		VIDEO	AUDIO
STR	PAL BG	G3967M	G9353M
	PAL I I'	K3958M	K9356
	PS BG DK K' I I'	K3958M	K9356
	PS BG DK K' L L'	K3958M	K9656

PINNING

1. Input
2. Input-ground
3. Chip carrier-ground
4. Output
5. Output

K9656M, L9653M

PINNING

1. Input
2. Switching Input
3. Chip carrier-ground
4. Output
5. Output

CIRCUIT DESCIRIPTION

POWER SUPPLY

The ZX series of receivers incorporate a Motorola switch mode power supply using a MC 44608-regulator controller IC. The circuit provides power to the receiver in both standby and normal operation modes.

START UP

The switch on the mains supply is fed through the mains filter network TR801, the surge limiter resistor R831, the bridge rectifier D891, and reservoir capacitor C809 producing approx. 320 volts D.C to feed the switching MOSFET Q801 via the primary winding of TR802 pins 6 and 8.

Start up resistor R801 feeds from a 500V coming from the mains through the adder diode D809 to pin 8 of IC800, the IC uses 9mA current source and connects it internally to VCC at pin6 allowing a rapid charge enough for start up.

Then IC800 responds with the oscillator starting to oscillate at a 40khz frequency fixed by the IC manufacturer. The IC then produces, pulse width modulation pulses, at this frequency on pin 5 to drive the base of the switching FET Q801, that will then switch current on and off through the primary of TR802, which will in turn provides voltages in the secondary windings. The secondary winding voltages being proportional to the length of time that Q801 is turned on in each cycle. The voltage produced between pins 4 and 3 of TR802 is rectified by D804 developing approx. 12 volts on C810, which takes over from the start up resistor to supply pin 8 of IC800.

The Demag pin at pin1 offers 3 different functions: Zero voltage crossing detection (50mV), 24mA current detection and 120mA current detection. The 24mA level is used to detect the secondary reconfiguration status and the 120mA level to detect an Over Voltage status called Quick OVP. The VCC at pin6 operates between 6,6V and 13V in normal operation, when this voltage exceeds 15V then the IC output is disabled.

VOLTAGE REGULATION

After initial start up the secondary voltages of TR802 are established. These voltages then need to be regulated to the required levels. In a switch mode power supply such as this, it is the ON time of the switching FET Q801 that determines the output voltages produced. To provide regulation of the supply there is a feedback loop via an adjustable zener IC818 and an OPTO- coupler connected to pin3 of IC800. The reference voltage of IC818 is set to 2,5V to supply a B+ voltage of 150V. Any fluctuation at this pin will cause IC800 to compensate it either by increasing or decreasing the voltage at the secondary outputs.

VOLTAGE PROTECTION

The MC44608 offers two OVP functions:

1- A fixed function that detects when V CC is higher than 15.4V

2- A programmable function that uses the demag pin. The current flowing into the demag pin is mirrored and compared to the reference current Iovp (120mA). -Thus this OVP is quicker than normal number one as it directly sense the change in current rather than waiting for a specific voltage value, and is called QOVP. In both cases, once an OVP condition is detected, the output is latched off until a new circuit START–UP.

3- A software controlled function acts on pin52 of IC501. This pin monitors feedback from both 8V and 5V via D512, then compares these to a reference value Vref pre-set by the hardware through resistors R545, R546, R548. In normal mode operation 1.2V < Vref < 2.2V. Any voltage outside this window will cause the micro controller to force the TV to stand by mode by lowering the standby port. Refer to standby mode.

CURRENT PROTECTION

To monitor the current drawn by the receiver the source of Q801 is returned to the bridge rectifier through low value resistors R807 and R834. All the current drawn by the receiver will flow through that parallel resistors each time Q801 conducts, this will produce a voltage across the resistors proportional to the current drawn by the receiver. This voltage is fed to pin 2 of IC800 via R806.When the receiver is working normally the voltage across R807 and R834 is only a fraction of a volt and is not large enough to have any effect on IC800. Under fault conditions, if the receiver draws excessive current the voltage across these resistors will rise. This voltage is monitored by the current sense input pin2.

This Current Sense pin senses the voltage developed on the series resistor R806 inserted in the source of the power MOSFET. When I sense reaches 1V, the Driver output (pin 5) is disabled. This is known as the Over Current Protection function. A 200mA current source is flowing out of the pin 3 during the start–up phase and during the switching phase in case of the Pulsed Mode of operation. A resistor can be inserted between the sense resistor and the pin 3; thus a programmable peak current detection can be performed during the SMPS stand–by mode.

SAFETY PRECAUTIONS

Remember that all the primary side components of the power supply shown to the left of TR8O2 on the diagram are live to earth. It is recommended that a mains isolation transformer is used when servicing the receiver.

Many of the components in the power supply are safety critical. (R831,R809) are surge-limiting resistors, limiting the surge through the degauss coils when the reservoir capacitor is empty. These are marked with an exclamation mark in a triangle on the circuit diagram. These components MUST be replaced only with parts of identical value and safety characteristics. For reliability, it is recommended that only genuine parts are used for service replacements. Always check the main supply voltage feeding the line output stage after replacing parts in the power supply or line output circuit. The correct voltage is important for safety and reliability, the correct voltage should be 150 V ± 2 V.

When servicing note that the reservoir capacitor C809 can remain charged to high voltage for some time after the a.c. supply is removed. This can result in a shock hazard or damage to components whilst working on the receiver.
Do not try to test Q801 base emitter junction if C809 is charged, your meter will turn on the transistor which will discharge the capacitor resulting in a collector emitter short circuit. Do not discharge C809 quickly with a screwdriver etc. The very high current produced can damage the internal connections of the capacitor causing failure at a later date.
Remember when checking voltages to use a return path on the same side of TR802 for the Voltmeter earth to obtain the correct readings.

STANDBY OPERATION

As mentioned earlier the Start–up Management of MC44608 is as follows:
The Vi pin 8 of IC800 is directly connected to the HV DC rail Vin. This high voltage current source is internally connected to the VCC pin and thus issued to charge the VCC capacitor. The VCC capacitor charge period corresponds to the Start–up phase. When the VCC voltage reaches 13V, the high voltage 9mA current source is disabled and the device starts working. The device enters into the switching phase.
To help increase the application safety against high voltage spike on pin8 a small wattage 1k_series resistor is inserted between the Vin rail and pin 8. After this start-up the IC can distinguish between the different modes of operation using the following technique:

MODE TRANSITION

The LW latch is the memory of the working status at the end of every switching sequence. Two different cases must be considered for the logic at the termination of the SWITCHING PHASE:

1. No Over Current was observed
2. An Over Current was observed

These two cases correspond to the two signals “NOC” in case of “No Over Current” and “OC” in case of Over Current. The effective working status at the end of the ON time memorized in LW corresponds to Q=1 for no over current, and Q=0 for over current.

To enter the standby mode secondary side is reconfigured using D889 loop, this starts with the microprocessor ‘s pin 47 becomes high; as the standby port becomes high Q503 conducts and Q802 becomes off then D889 conducts and the high voltage output value becomes lower than the NORMAL mode regulated value. The shunt regulator IC818 is fully OFF. In the SMPS stand–by mode all the SMPS outputs are lowered except for the low voltage output that supply the wake–up circuit located at the isolated side of the power supply. In that mode the secondary regulation is performed by the Zener diode (D801) connected in parallel to the TL431. The secondary reconfiguration status can be detected on the SMPS primary side by measuring the voltage level at pin4 of TR802.

In the SMPS stand–by mode the 3 distinct phases are:

The SWITCHING PHASE: Similar to the Overload mode. The current sense clamping level is reduced. When VCC crosses the current sense section, the C.S. clamping level depends on the power to be delivered to the load during the SMPS stand–by mode. Every switching sequence ON/OFF is terminated by an OC as long as the secondary Zener diode voltage has not been reached. When the Zener voltage is reached the ON cycle is terminated by a true PWM action. The proper SWITCHING PHASE termination must correspond to a NOC condition. The LW latch stores this NOC status.
The LATCHED OFF PHASE: The MODE latch is set.
The START–UP PHASE is similar to the Overload Mode. The MODE latch remains in its set status (Q=1).
The SWITCHING PHASE: The Stand–by signal is validated and the 200uA is sourced out of the Current Sense pin 2.

SMPS SWITCH OFF

When the mains is switched OFF, so long as the electrolytic bulk capacitor provides energy to the SMPS the controller remains in the switching phase. Then the peak current reaches its maximum peak value, the switching frequency decreases and all the secondary voltages are reduced. The VCC voltage is also reduced. When VCC is less than 6,5V, the SMPS stops working.

MICROPROCESSOR IC501

IC 501 controls all the functions of the receiver operated by the remote control and the front panel customer controls. It produces the on screen graphics, operates tuning, customers controls and engineering controls, and also incorporates all of the Teletext functions. It also controls the video processor, the audio processor, and the tuner. The circuits just mentioned are controlled via the I²C bus. Also IC501 controls the video source switching, vertical position adjustment and the vertical linearity adjustment via its ports.

An external 8K EEprom is used by the micro. The EEprom comes fully programmed. The main clock oscillator is 4.0 MHz crystal X501 on pins 50 and 51. Reset is provided on pin 2 via Q504. On switching on pin 2 becomes high and the controller gets reset which stays valid till a low signal comes on that pin.

CONTROLS

Command information from the infra red remote controller is fed through the sensor to pin 1 of the microprocessor. Operation of the customer front panel keys is detected by pin 8 that is an ADC (analogue to digital converter). Pressing a switch will connect the 5V to the ground through a particular resistor that determines the value of the voltage on pin8 at that instant. This obtained value is comprehended by the micro and the corresponding operation is performed. Refer to the following table:

Button	Theoretical voltage
P+	1.5V
P-	2.0V
V+	3.0V
V-	4.0V
Menu	1.0V

IC501automatically switches from TV mode to AV1, AV2 by detecting the signal from pin29 or pin8 at the scart connector, through its 56, 55 pins. The picture mode is determined according to the following table:

Direct voltage	Voltage Incrementing	Picture mode
0 to 2.0 V	0 to 4.5 V	TV mode
2.0 to 7.0 V	4.5 to 9.5	16:9 Mode
7.0 to 12 V	9.5 to 12	4:3 Mode

TUNING

All the tuning functions are carried by the microprocessor IC501. Three tuning modes are available for this chassis, VST tuning, PLL tuning, and frequency tuning. In all of these both manual and automatic modes are possible. If Auto Tuning Mode is selected the receiver tunes Band 1, Band2, and UHF, putting into memory the channel, signal strength (signal's amplitude for VST and video indent for PLL), and tuning data of each TV station found. The memories are then stored automatically to put the channels into frequency order from lowest frequency to the highest one. In APS (Auto-Programming-System) TV sets the channels are stored according to the standard tables provided for each country.

In VST mode IC501 generates the tuning control voltage as pulse width modulation output at pin54. This pulse operates a voltage switch Q502 converting the 0 to 5V pulse into a 0 to 33V pulses that are then integrated and smoothed by R550/553/ 567 and C548/535/238 to give a steady DC voltage of value between 0 to 33V for tuning control on pin 2 of the tuner. IC501 also controls the band switching of the tuner by pins 12/13/14 via Q505, Q506 and Q507 for the different bands UHF, Band1, and Band2.

In both PLL and frequency tuning modes the tuning process is controlled by IC501 via the I²C BUS. In PLL mode a table for all the channels available is set according to the standards and the micro controller uses these values to set the central frequency of the required channel. This mode is quicker that VST mode.

Frequency tuning is a new feature to this chassis; it takes the advantages of both VST and PLL tuning. As in PLL mode the tuning process is controlled via I²C bus, however the channels' are not predefined in the software by a table on the con trary these are scanned as in VST but here the frequency changes and not the voltage. In frequency tuning the micro generates I²C signals to account for a 1MHz frequency increment on the tuner and then scan all the frequency either manually or automatically. This method is faster than the VST and more precise than PLL tunings.

Automatic fine tuning (AFT) correction voltage is done internally inside IC403 and fed to the microprocessor via I²C BUS. This is used by the software to modify the mark space output at pin 54 producing the tuning voltage. The AFT voltage is also used in tuning mode to identify the presence of a signal whilst tuning. This is used in auto tuning mode to determine the optimum frequency setting for the channel. Tuner AGC voltage from pin 8 of IC403 is taken directly to the tuner.

VOLUME CONTROL

A pulse width modulation output is developed inside the processor and is fed to the audio processor in stereo sets and to the video processor in mono sets via the I²C BUS to control the volume. The physical control on the front panel works in the same way.

TELETEXT

The microprocessor IC501 performs all of the teletext functions internally. The Composite Blanking video and Sync signal (CBVS) is input to pin 33 of the micro from pin 29 of IC403. When text is selected the text graphics are output as R.G.B signals on pins 15/16/17 of the micro and fed to pins 34/35/36 of IC403. At the same time pin 18 of the micro goes high taking pin 37 of IC403 high, blanking the picture and selecting text R.G.B. input.
Note. mixed mode is available and fast text with 8-page memory.

A.V SWITCHING

A.V. input can be selected from the remote control or by applying 6 to12 volts from pin 8 of the scart connector, This takes pin 55/56 of the micro high (5 volts). When external A.V input is requested pin 55 or Pin 56 of the micro goes high. This is then transmitted via the I²C bus to IC403, selecting external signals from the scart connector.

SERVICE MODE

The AK37 chassis incorporates an electronic service mode operated by the micro. Full details are given on pages 20 to 25 of the service manual. The mode is entered by a combination of button presses (4-7-2-5), whilst the Main menu is on the screen. You can select any adjustment and change it.

A list of adjustments is available such as OSD position, IF central frequency adjustment, AGC, vertical linearity, size, position, horizontal position, R.G.B gains, APR, tuner settings for PLL tuners, and five options for the TV set features configurations.

EEPROM INITIALIZATION

If the E²PROM IC500 is replaced it will come fully programmed and therefore it is not necessary to initialise the new device. In some circumstances the E²PROM may become corrupted in use i.e. static discharge or lightning strike. If this happens, it is advised that the E²PROM is replaced.

OFF AIR SIGNAL PATH
TUNER

A UV1315 voltage controlled tuner is used on the AK37 chassis, operating from a 5volt supply, line (pin6). A 0 to 33 volt rail is used for tuning (pin 2), controlled by the microprocessor IC501. The AFT pin on the tuner is not used, instead the Automatic Fine Tuning is achieved by modifying the tuning control line. This is done by software in IC501. The gain of the tuner can be altered by the AGC control voltage fed in to pin1.

The tuner produces a balanced output on pins 10,11. Neither side is connected to earth. This is fed via a surface wave filter Z402 to the IF input of IC403 (pins 6 and 7).

IC403 incorporate the IF amplification, AFT, AGC, video and sound detectors as well as AV switching. The IC requires both 5 and 8 V tuned circuit for these functions, L401, L402, L403, and L406.

VIDEO PATH

The detected video signal is output from pin 13 of IC403, to sound traps Z403/404. The video is taken from the other side via the appropriate filter to pin 18 of IC403. (1.2 p to p) Video to the scart connectors is taken after R473 to Pin 40 of the scart connector. The CVBS_TXT output pin 29 output is fed to IC501 pin 34 (for teletext). The video signal is sometimes labelled CVBS on the circuit diagram. This stands for Composite Video Blanking & Sync.

The composite signal is input pin 13 (Video input) of IC403. This IC carries out all of the luma/Chroma processing internally and also provides the customer control functions of brightness, contrast, sharpness and saturation. IC403 is I²C bus controlled and incorporates auto greyscale circuitry and internal luma/chroma delay lines. The resulting R.G.B drive is output on pins 30,31 and 32. The R.G.B passes via connector PL405 to the CRT base PCB. Here the R.G.B signal is amplified by IC900 to provide drive for the cathodes of the CRT. IC900 produces a feedback signal which is fed to IC403 (pin 33) for blanking and auto grayscale correction.

SOUND PATH

The demodulated mono sound is taken from pin 55 of IC403 directly to the sound output stage IC301 Pin 7. The output signal from IC301 is Volume controlled achieved within IC403 using the I²C bus line from IC501. To limit the volume at the specified out put the A_out pin 55 is fed to IC301 through a voltage divider R455 and R454. Muting of the output stage is provided from Pin 46 of IC501 to pin5 IC301.

In the stereo model the IF from pins 10 & 11 of the tuner passes through Z401 and the output signal goes through pins 1&2 of IC403. The output QSS signal from IC403 is taken from pin 11 and sent to audio processor IC700. The left channel is output on pin 29 and the right channel output is on pin 28.Then this outputs are fed directly to IC301.
IC403 handles also the AM modulated signals in L/L' systems at pins 1&2.

AV INPUT SIGNAL PATH
Video and Sound

IC403 has three CVBS inputs at pins 18,20 and 22.The composite video signal of AV1 is taken from pin 41 of the scart connector to pin20 of IC403. The mono sound signal is taken from pins 23 and 27 of the scart sockets to the switching transistors Q101. The transistor switch the audio depending on the source, and is then fed to pin14 of IC403. The CVBS coming from AV2 or AV3 is taken from pin20 of scart connector, from the JK101 for BAV or FAV, from the JK102 for SVHS. Then these signals are switched by transistors Q141; Q142 depending on the source by the microprocessor's pins 5,6,7. The resultant signal is given to pin 22 of IC403.

Scart two supports also SVHS signals and then the chroma comes from pin 15 of connector PL101 directly to pin 23 of IC403, whilst the luma uses the same path as the CVBS of AV2.

When AV input is selected pin 5,6,7 of the microprocessor IC50 I is taken high, this switches the IC403 to external input mode via I²C BUS. This connects the video inputs on pins 20 or 22 to IC403 and the audio input on pin 14 to the audio out on pin 55 (via the internal volume control circuit) The signal paths are then as for off air.
The chassis can detect the video signals on scart 1 and 2 using pin 8 switching voltages at pins 56 and 55 of IC501.

R.G.B

The R.G.B signals from pins 28,32 and 36 of the scart connector (PL101) are fed to the R.G.B input pins (25,26,27) of IC403. R.G.B operation can be enabled by either taking pin 37 of the scart connector high, this high is fed to Pin 28 of IC403, or via the I²C bus the microprocessor sets IC403 to forced R.G.B mode in which the video processor generates its own fast blank signal. This puts the IC into external R.G.B mode and selects the inputs on pins 25,26 and 27, overriding the video input on pin 20/22.
Note: When using R.G.B input the contrast, brightness and colour controls will still operate.

LINE CIRCUIT

Line and frame drive are generated by IC403. The sync pulses are separated from the incoming video signal at pins 18/20/22 and used to control the internal circuitry of the IC. Line drive is produced by counting down the external 4.43 MHz crystal at pin 40 to15.625 kHz locked to the incoming sync. This drive is output on pin 48 and feeds directly to the line drive transistor Q600. Note. that the output of IC403 Pin 48 is an open-collector and requires a pull up resistor, if the pin is open circuited for test no waveform will be seen. Q600 collector feeds the line output transistor Q601.
The line output stage is conventional with a transformer containing a split diode winding for EHT generation; fifth harmonic tuning is achieved by capacitor C618/619.

FIELD OUTPUT VERTICAL SHIFT

A fly-back pulse is taken from pin 1 of the FBT transformer. This is required by IC403 (Pin 49) for burst / sync gating, and RGB line blanking. The ver_sync signal is output from the pin47 and fed to pin41 of IC501. The H_sync pulse is taken from pin 1 of the FBT and fed to the micro at pin 40.These two signals are required by the micro for graphics timing and also for text.
IC403 generates a vertical pulse signal V_OUT that is fed to IC601 (the vertical stage IC). IC601 is supplied by a 26V DC via diode D616 and a 13V DC via diode D613 .It generates its own ramp signal and based on the V_OUT signal and produces the vertical deflection signals that are fed to connector PL602. Horizontal adjustments (Horizontal amplitude, pincushion, corner correction) are controlled by EW_OUT at pin 11.This output drives the transistor Q602.

B.C.L CIRCUIT (BEAM CURRENT LIMITER)

Beam current limiting is employed to protect the circuitry in the receiver, the CRT and to prevent excessive X-Ray radiation in fault conditions. The current drawn by the CRT is monitored by the current drawn through the winding of the fly-back transformer that produces the EHT for the CRT anode. The end of the winding (Pin 10) is returned to IC403 pin 46, the beam current drawn by the CRT passes through Q601 and develops a voltage on the collector proportional to the current (V=IxR). The voltage on the collector will vary depending on the beam current being drawn reducing the brightness and contrast of the picture. If the voltage is sufficiently negative (indicating very high excess beam current) the output will be reduced, reducing the picture brightness and contrast.

AK37 CHASSIS MANUAL ADJUSTMENT PROCEDURE

In order to enter service menu, first enter the main menu and then press the digits 4, 7, 2 and 5 respectively. To select adjust parameters, use Ù or Ú buttons. To change the selected parameter, use < or > buttons. Selected parameter will be highlighted.

Entire service menu parameters of AK37 CHASSIS are listed below. For some of parameters the default values are given on the same table.

REGISTER	PARAMETER	NOTE
OSD	OSD Horizontal Position	ADJUST HORIZONTAL POSITION FOR OSD
IF1	IF Coarse Adjust	
IF2	IF Fine Adjust	
IF3	IF Coarse Adjust for L-Prime	
IF4	IF Fine Adjust for L-Prime	
AGC	Automatic Gain Control	
VLIN	Vertical Linearity	ADJUST VERTICAL LINEARITY
VS1A	Vertical Size for 50 Hz / 4:3 (AK30)	
VS1B	Vertical Size for 50 Hz / 16:9 (AK30)	
VP1	Vertical Position for 50 Hz (AK30)	
HP1	Horizontal Position for 50 Hz (AK30)	
VS2A	Vertical Size for 60 Hz / 4:3 (AK30)	
VS2B	Vertical Size for 60 Hz / 16:9 (AK30)	
VP2	Vertical Position for 60 Hz (AK30)	
HP2	Horizontal Position for 60 Hz (AK30)	
RGBH	RGB Horizontal Shift Offset	CVBS – RGB HORIZONTAL POSITION COMPENSATION
VSOF	Vertical Size Offset for 60Hz (AK37)	ADJUST AFTER SETTING ALL GEOMETRY VALUES IN 50 HZ
VPOF	Vertical Position Offset for 60 Hz (AK37)	ADJUST AFTER SETTING ALL GEOMETRY VALUES IN 50 HZ
HSOF	Horizontal Size Offset for 60 Hz (AK37)	ADJUST AFTER SETTING ALL GEOMETRY VALUES IN 50 HZ
HPOF	Horizontal Position Offset for 60 Hz (AK37)	ADJUST AFTER SETTING ALL GEOMETRY VALUES IN 50 HZ
HTOF	Horizontal Trap Correction Offset for 60 Hz (AK37)	ADJUST AFTER SETTING ALL GEOMETRY VALUES IN 50 HZ
WR	White Point Adjust for RED	
WG	White Point Adjust for GREEN	
WB	White Point Adjust for BLUE	
BR	Bias for RED	
BG	Bias for GREEN	
APR	APR Threshold	
FMP1	FM Prescaler when AVL is OFF	STEREO ONLY
NIP1	NICAM Prescaler when AVL is OFF	STEREO ONLY
SCP1	SCART Prescaler when AVL is OFF	STEREO ONLY
FMP2	FM Prescaler when AVL is ON	STEREO ONLY
NIP2	NICAM Prescaler when AVL is ON	STEREO ONLY
SCP2	SCART Prescaler when AVL is ON	STEREO ONLY
S1V	SCART1 Volume	STEREO ONLY
S2V	SCART2 Volume	STEREO ONLY
F1H	High Byte of crossover frequency for VHF1-VHF3	MEANINGFUL FOR ONLY PLL TUNER (see tuner setting table)
F1L	Low Byte of crossover frequency for VHF1-VHF3	MEANINGFUL FOR ONLY PLL TUNER (see tuner setting table)
F2H	High Byte of crossover frequency for VHF3-UHF	MEANINGFUL FOR ONLY PLL TUNER (see tuner setting table)
F2L	Low Byte of crossover frequency for VHF3-UHF	MEANINGFUL FOR ONLY PLL TUNER (see tuner setting table)
BS1	Band Switch Byte for VHF1 Meaningful for only	MEANINGFUL FOR ONLY PLL TUNER (see tuner setting table)
BS2	Band Switch Byte for VHF3 Meaningful for only	MEANINGFUL FOR ONLY PLL TUNER (see tuner setting table)
BS3	Band Switch Byte for UHF Meaningful for only	MEANINGFUL FOR ONLY PLL TUNER (see tuner setting table)
CB	Control Byte Meaningful for only PLL Tuner	MEANINGFUL FOR ONLY PLL TUNER (see tuner setting table)
OP1	Option 1 (see the Option List)	PERIPHERAL OPTIONS (see option table)
OP2	Option 2 (see the Option List)	RECEPTION STANDART OPTIONS (see option table)
OP3	Option 3 (see the Option List)	VIDEO OPTIONS (see option table)
OP4	Option 4 (see the Option List)	TV FEATURE OPTIONS (see option table)
OP5	Option 5 (see the Option List)	CHANNEL TABLE OPTIONS (see option table)
TX1	Teletext Option 1 (see the Option List)	TELETEXT OPTIONS (see option table)
GEOM	Geometry Option (see the Option List) (AK37)	GEOMETRY OPTIONS (see option table)

In order to enter the geometry menu, press the green button on the remote control :

REGISTER	PARAMETER	NOTE
VSIZ	Vertical Size	ADJUST VERTICAL SIZE (50 HZ)
VPOS	Vertical Position	ADJUST VERTICAL POSITION (50 HZ)
VSCO	Vertical S Correction.	ADJUST VERTICAL S CORRECTION (50HZ)
VCCO	Vertical C Correction.	ADJUST VERTICAL C CORRECTION (50HZ)
HSIZ	Horizontal Size	ADJUST HORIZANTAL SIZE (50 HZ)
HPOS	Horizontal Position.	ADJUST HORIZANTAL POSITION (50 HZ)
HPCO	Horizontal Pincushion Correction for	ADJUST HORIZANTAL PINCUSHION CORRECTION (50 HZ)
HCCO	Horizontal Corner Correction.	ADJUST HORIZANTAL CORNER CORRECTION (50HZ)
HTCO	Horizontal Trap Correction.	ADJUST HORIZANTAL TRAP CORRECTION (50HZ)
VZSZ	Zoom Vertical Size.	ADJUST VERTICAL SIZE FOR ZOOM MODE (50HZ)

USING REMOTE CONTROL BUTTONS

RED BUTTON (For Stereo models only): It switches the AVL to ON or OFF mode on service menu.
AVL word is visible on service menu when AVL is on.
GREEN BUTTON : It is used to enter the geometry menu.
YELLOW BUTTON : It switches to VERTICAL SCAN DISABLE mode on service menu. It is usefull to adjust screen voltage. It is also used as Program Down button on geometry menu.
BLUE BUTTON : It is used to adjust AGC and IF automatically on service menu.It is also used as Program Up button on geometry menu.
TTX UPDATE BUTTON : It is used to change the picture mode on geometry menu.

WHITE BALANCE ADJUSTMENT

The following three parameters are used to make white balance adjustment. To do this, use a Colour Analyser. Using WR (White point adjust for RED), WG (White point adjust for GREEN), WB (White point adjust for BLUE) parameters, insert the + sign in the square which is in the middle of the screen.
The suggested values for these parameters are given on the table above.

AGC ADJUSTMENT

In order to do AGC adjustment, enter a **60dBmV** RF signal level from channel C-12 (224.25 MHz)
Select AGC parameter from service menu. Press BLUE (INSTALL) button from remote controller. The adjustment will be done automatically by software. See the AGC indicator on service menu, it must be 1. Check that picture is normal at 90dBmV signal level.

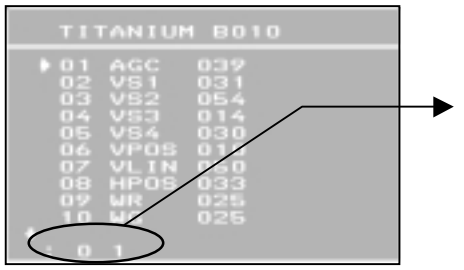

:	1	1
IF INDICATOR	AGC INDICATOR	NONE

FIGURE-1

IF NEGATIVE ADJUSTMENT (WITHOUT L' SYSTEMS)

Set the video pattern to a **PAL colour bar** pattern with frequency **38.9 MHz**. Apply this IF signal to PIN-10 and PIN-11 of tuner. Press PROG-1 and after that BLUE (INSTALL)button from remote controller. Select the standart as **BG** or **I**. (if BG is not available) Enter service menu. Select **IF1** parameter from service menu and press BLUE (INSTALL) button from remote controller. IF adjustment will be done automatically by software. See the IF indicator on service menu, it must be like on FIGURE-1 shown above.

IF POSITIVE ADJUSTMENT (WITH L' SYSTEMS)

Set the video pattern to a **SECAM-L colour bar** pattern with frequency **33.9 MHz**. Apply this IF signal to PIN-10 and PIN-11 of tuner. Press PROG-1 and after that BLUE (INSTALL)button from remote controller. Select the BAND VHF-1 (S1 – S4 for PLL tuners) and standard as **L'**. Enter service menu. Select **IF1** parameter from service menu and press BLUE (INSTALL) button from remote controller. IF adjustment will be done automatically by software. See the IF indicator on service menu, it must be like on FIGURE-1 shown above.

OSD HORIZONTAL POSITION ADJUSTMENT

Select OSD parameter on service menu. Adjust the horizontal position of OSD to the middle of screen, by using the reference bar on bottom of service menu.

TELETEXT BRIGHTNESS ADJUSTMENT

Set the TV set to a channel with Teletext. Enter service menu. Press TEXT button from remote controller. Adjust BRIGHTNESS parameter to value **39** by using left-right buttons from remote controller. Press TV button and MENU button from remote controller respectively. Adjustment is done.

GEOMETRY ADJUSTMENTS

First adjust all the 50 Hz geometry values defined in geometry menu for each picture mode. Then, enter service menu and adjust 60 Hz geometry values for each picture mode by using offset adjustment items.

Vertical Size for 50 Hz (VSIZ and VZSZ) Enter a PAL B/G circle test pattern via RF. Enter geometry menu and press TTX UPDATE button from remote controller to switch to any picture mode on geometry menu. Change VSIZ till the picture format becomes the required format. Check and readjust Vertical Size item if the adjustment becomes improper after some other geometric adjustments are done. Repeat this for every picture mode.Use VZSZ for proper vertical size adjustment in zoom,subtitle and cinema modes.
Vertical Position for 50 Hz(VPOS) Enter a PAL B/G circle test pattern via RF. Enter geometry menu and press TTX UPDATE button from remote controller to switch to any picture mode on geometry menu. Change Vertical Position till the test pattern is vertically centred. Horizontal line at the centre pattern is in equal distance both to upper and lower side of the picture tube. Check and readjust Vertical Position item if the adjustment becomes improper after some other geometric adjustments are done. Repeat this for every picture mode.
Horizontal Size for 50 Hz (HSIZ) Enter a PAL B/G circle test pattern via RF. Enter geometry menu and press TTX UPDATE button from remote controller to switch to any picture mode on geometry menu. Change HSIZ (Horizontal Size) till the picture format becomes the required format. Check and readjust Horizontal Size item if the adjustment becomes improper after some other geometric adjustments are done. Repeat this for every picture mode.
Horizontal Position for 50 Hz (HPOS) Enter a PAL B/G circle test pattern via RF. Enter geometry menu and press TTX UPDATE button from remote controller to switch to any picture mode on geometry menu. Change Horizontal Position till the picture is horizontally centred. Check and readjust Horizontal Position item if the adjustment becomes improper after some other geometric adjustments are done. Repeat this for every picture mode.
Horizontal Trap Correction for 50 Hz (HTCO) Enter a PAL B/G circle test pattern via RF. Enter geometry menu and press TTX UPDATE button from remote controller to switch to any picture mode on geometry menu. Change HTCO till the picture format becomes the required format. Repeat this for every picture mode.
Vertical S Correction for 50 Hz (VSCO) Enter a PAL B/G circle test pattern via RF. Enter geometry menu and press TTX UPDATE button from remote controller to switch to any picture mode on geometry menu. Change VSCO till the picture format becomes the required format. Repeat this for every picture mode.
Vertical C Correction for 50 Hz (VCCO) Enter a PAL B/G circle test pattern via RF. Enter geometry menu and press TTX UPDATE button from remote controller to switch to any picture mode on geometry menu. Change VCCO till the picture format becomes the required format. Repeat this for every picture mode.
Horizontal Pincushion Correction for 50 Hz (HPCO) Enter a PAL B/G circle test pattern via RF. Enter geometry menu and press TTX UPDATE button from remote controller to switch to any picture mode on geometry menu. Change HPCO till the picture format becomes the required format. Repeat this for every picture mode.
Horizontal Corner Correction for 50 Hz (HCCO) Enter a PAL B/G circle test pattern via RF. Enter geometry menu and press TTX UPDATE button from remote controller to switch to any picture mode on geometry menu. Change HCCO till the picture format becomes the required format. Repeat this for every picture mode.
Vertical Size Offset for 60 Hz (VSOF) Enter a NTSC-M circle test pattern in any picture mode via RF. Enter service menu. By changing VSOF value adjust vertical size for 60Hz. Repeat this for every picture mode.
Vertical Position Offset for 60 Hz (VPOF) Enter a NTSC-M circle test pattern in any picture mode via RF. Enter service menu. By changing VPOF value adjust vertical position for 60Hz. Repeat this for every picture mode.
Horizontal Size Offset for 60 Hz (HSOF) Enter a NTSC-M circle test pattern in any picture mode via RF. Enter service menu. By changing HSOF value adjust horizontal size for 60Hz. Repeat this for every picture mode.
Horizontal Position Offset for 60 Hz (HPOF) Enter a NTSC-M circle test pattern via RF. Enter service menu. By changing HPOF value adjust horizontal position for 60Hz. Repeat this for every picture mode.
Horizontal Trap Correction Offset for 60 Hz (HTOF) Enter a NTSC-M circle test pattern via RF. Enter service menu. By changing HTOF value adjust horizontal trap correction for 60Hz. Repeat this for every picture mode.
RGB MODE Horizontal Position (RGBH) Enter a RGB circle test pattern via video inputs. Force the TV to RGB mode by pressing AV button from remote controller. Change RGB Horizontal Position till the picture is horizontally centred. Check and readjust RGBH item if the adjustment becomes improper after some other geometric adjustments are done.

50 Hz. 4:3 Geometry Adjustment for 4:3 Tube

50 Hz. 16:9 Geometry Adjustment for 4:3 Tube

50 Hz. 14:9 Geometry Adjustment for 16:9 Tube

OPTION SETTINGS

Select concerned OPTION from service menu. To change a bit on selected option press the same number from remote controller. So this bit will be changed from 1 to 0 or from 0 to 1. If any option is selected on service menu you will see an indicator row shows you the bit numbers.

OP1 – Peripheral Options		
		NOTE
BIT-7	NOT USED	0 default value
BIT-6	1, Display "AV-3" as "F-AV" 0, Display "AV-3" as "B-AV"	FAV or BAV IN selection option
BIT-5	1, Turn back TV mode after the last AV (with AV key) 0, Turn back first AV mode after the last AV	
BIT-4	1, SVHS is available in AV key stream 0, SVHS is NOT available in AV key stream	1, if AV-2 is selected
BIT-3	1, RGB is available in AV key stream 0, RGB is NOT available in AV key stream	1, if AV-1 is selected
BIT-2	1, AV-3 is available in AV key stream 0, AV-3 is NOT available in AV key stream	1, if FAV-IN or BAV-IN available
BIT-1	1, AV-2 is available in AV key stream 0, AV-2 is NOT available in AV key stream	
BIT-0	1, AV-1 is available in AV key stream 0, AV-1 is NOT available in AV key stream	

OP2 – Reception Standard Options		
		NOTE
BIT-7	1, 3-button keyboard (V-, P+, V+) 0, 4/5 button keyboard (V-, V+, P-, P+, Menu)	0, default value
BIT-6	1, L/L' is available 0, L/L' is not available	
BIT-5	1, I is available 0, I is not available	
BIT-4	1, DK is available 0, DK is not available	
BIT-3	1, BG is available 0, BG is not available	
BIT-2	1, 3D PANORAMA is visible 0, DOLBY VIRTUAL is visible	
BIT-1	1, For Secam LLP,EXT MONO INPUT is available 0, Inner demodulation is available for SECAM LLP	
BIT-0	1, Low power consumption at standby is available 0, low power consumption at standby is not available	1, default value

OP3 – Video Options		
		NOTE
BIT-7 BIT-6	Xtal Configuration 00, 1 Xtal PAL 4.43 01, 2 Xtal PAL/NTSC 4.43/3.58 10, 1 Xtal PAL/SEC/NTSC 4.43 11, 2 Xtal PAL/SEC/NTSC 4.43/3.58	
BIT-5	1, Enable Blue back when no signal in AV mode 0, blank back when no signal in AV mode	1, default value
BIT-4	1, White Insertion is ON 0, White Insertion is OFF	1, default value
BIT-3	1, Blue Background when no signal in TV mode 0, Disable Blue Background in TV mode	
BIT-2	1, Semi-transparent background for OSD 0, Solid Menu background for OSD	1, default value
BIT-1	1, Black Stretch is ON 0, Black Stretch is OFF	0, default value
BIT-0	1, APR is ON 0, APR is OFF	1, default value

OP4 – TV Features		
		NOTE
BIT-7	1, Headphone is available (for STEREO models) 0, Headphone is not available	
BIT-6	1, Arabic/Persian is available in menu languages(for A,D,E,F, and later) 0, Arabic/Persian is not available in menu languages	
BIT-5	1, Hebrew is available in menu languages(for A,D,E,F, and later) 0, Hebrew is not available in menu languages	
BIT-4	1, Hotel Mode can be activated 0, Hotel Mode can not be activated	
BIT-3	1, No Signal Timer is enabled 0, No Signal Timer is disabled	3 min. countdown and switch off when no signal
BIT-2	1, Frequency based search for PLL tuner 0, Channel table based search for PLL tuner no meaning for VST tuner	
BIT-1	1, 3-band tuning (VHF1, VHF3, UHF) 0, 1-band tuning (only UHF)	1, default value
BIT-0	1, Extra 200 msec blanking for VST 0, no extra blanking	1, default value

OP5 – Channel Tables		
		NOTE
BIT-7	1, Extra 150 msec blanking more for VST 0, no extra blanking	1, default value
BIT-6	1, "Programme" item in AUTOSTORE menu is visible 0, "Programme" item in AUTOSTORE menu is invisible	1, default value
BIT-5	1, Force both channel on even no carrier(carrier mute disable) 0, Default value after reset	
BIT-4	1, French OS Channel Table is available 0, French OS Channel Table is not available	1, when L/L' is available
BIT-3	1, French Channel Table is available 0, French Channel Table is not available	1, when L/L' is available
BIT-2	1, England Channel Table is available 0, England Channel Table is not available	1, when I/I' is available
BIT-1	1, East Europe Channel Table is available 0, East Europe Channel Table is not available	1, when B/G is available
BIT-0	1, West Europe Channel Table is available 0, West Europe Channel Table is not available	1, when DK is available

TX1 – Teletext Options		
		NOTE
BIT-7	1, AUTO_APS is available after power_on 0, AUTO_APS is not available	
BIT-6	RESERVED (must be 0)	0, default value
BIT-5 BIT-4 BIT-3	**5 4 3 Teletext Language Groups** **000, Group 1 – West** (English, French, Swedish, Czech, German, Portuguese, Italien, Rumanian) **001, Group 2 – West/East** (Polish, French, Swedish, Czech, German, Serbian, Italien, Rumanian) **010, Group 3 – West/Turkish** (English, French, Swedish, Turkish, German, Portuguese, Italien, Rumanian) **011, Group 4 – East/Cyrillic** (English, Cyrillic, Swedish, Czech, German, Serbian, Lettish, Rumanian) **100, Group 5 – Arabic** (English, French, Swedish, Turkish, German, Hebrew, Italien, Arabic)	
BIT-2 BIT-1 BIT-0	**2 1 0 Device type selection** 000, EPROM M6 A 001, ROM H5 P 010, ROMLESS H5 P 011, EPROM M6 R 100, ROM M6 R 101, OSDEPROM M6 R 110, ROM M6 P 111, Read Auto Gain Table for the device from EEPROM	101, default value

GEOM – Geometry Options		
		NOTE
BIT-7	NOT USED	0, default value
BIT-6	1, SVHS audio input in FAV/BAV in 0, SVHS in AV2	1, default value.
BIT-5	1, AK37 adjustment values are valid(default for AK37) 0, AK30 adjustment values are valid	
BIT-4	1, Zoom mode is available 0, Zoom mode is not available	
BIT-3	1, Subtitle mode is available 0, Subtitle mode is not available	
BIT-2	1, Cinema mode is available 0, Cinema mode is not available	
BIT-1	1, 14:9 mode is available 0, 14:9 mode is not available	
BIT-0	1, 16:9 tube is used 0, 4:3 tube is used	

TUNER SETTINGS

	VHF1-VHF3	VHF3-UHF	AK30 SERVICE MENU ITEMS					
	Frq. (Mhz)	Frq. (Mhz)	F1H	F1L	F2H	F2L	BS1	B
Philips UV1316S MK3	156,25 MHz	441,25 MHz	00001100	00110010	00011110	00000010	00000001	0000
Thomson CTT5020	114,25 MHz	401,25 MHz	00001001	10010010	00011011	10000010	00000011	0000
Samsung TECC2949PG28B	170,25 MHz	465,25 MHz	00001101	00010010	00011111	10000010	00000001	0000
Samsung TECC2949PG35B	170,25 MHz	449,25 MHz	00001101	00010010	00011110	10000010	00000001	0000
Alps TEDE9X226A	142,25 MHz	425,25 MHz	00001011	01010010	00011101	00000010	00000001	0000
Alps TEDE9-004A	149,25 MHz	424,25 MHz	00001011	11000010	00011100	11110010	00000001	0000

Explanations	
F1H	High byte of VHF1-VHF3 cross-over frequency
F1L	Low byte of VHF1-VHF3 cross-over frequency
F2H	High byte of VHF3-UHF cross-over frequency
F2L	Low byte of VHF3-UHF cross-over frequency
BS1	Band switching byte for VHF1
BS2	Band switching byte for VHF3
BS3	Band switching byte for UHF
CB	Control byte

NOTE : In case of an EEPROM defect you do not need an original MASTER EEPROM to run the TV again. Because of a special feature of software, AK30 chassis works with an unprogrammed EEPROM. (Even without an EEPROM) In such kind of case service staff has to put a new EEPROMwith the same type on the chassis and adjust all the options according to MANUAL ADJUSTMENT PROCEDURE !

GENERAL BLOCK DIAGRAM OF CHASSIS AK37

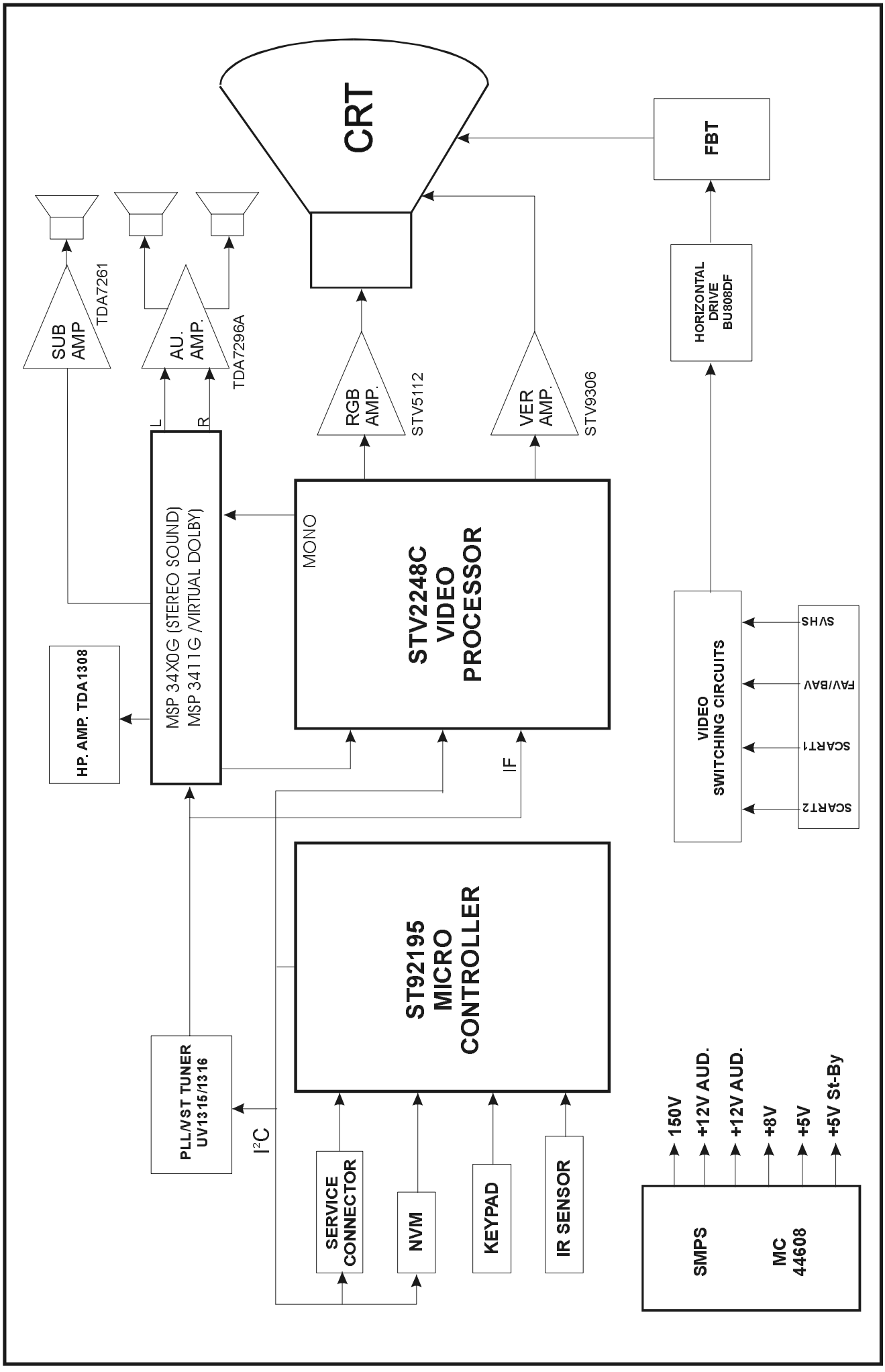

AK37 / TITANIUM – Languages Groups

GROUP 1 - WEST

- ENGLISH
- FRENCH
- SWEDISH
- CZECH
- GERMAN
- PORTUGUESE
- ITALIAN
- RUMANIAN

GROUP 2 – WEST / EAST

- POLISH
- FRENCH
- SWEDISH
- CZECH
- GERMAN
- SERBIAN
- ITALIAN
- RUMANIAN

GROUP 3 – WEST / TURKEY

- ENGLISH
- FRENCH
- SWEDISH
- TURKISH
- GERMAN
- PORTUGUESE
- ITALIAN
- RUMANIAN

GROUP 4 – EAST / CYRILLIC

- ENGLISH
- CYRILLIC
- SWEDISH
- CZECH
- GERMAN
- SERBIAN
- LETTISH
- RUMANIAN

GROUP 5 - ARABIC

- ENGLAND
- FRENCH
- SWEDISH
- TURKISH
- GERMAN
- HEBREW
- ITALIAN
- ARABIC

Using Remote Control Buttons

RED : Is used to switch AVL to ON or OFF mode on service menu.
GREEN : Is used to enter the geometry menu.
YELLOW : Is used to prepare the system for screen adjustments.
BLUE : Is used for automatic IF and AGC adjustments.
TTX Update : Is used to change the picture mode.

FEATURES

•It is a remote controlled colour television
•100 programmes from VHF, UHF bands or cable channels can be preset
•It can tune cable channels
•Controlling the TV is very easy by its menu driven system
•It has Euroconnector* socket for external devices (such as computer, video, video games, audio set, etc.)
•A second Euroconnector* socket is available
•Stereo sound systems* (German, Nicam or German+Nicam) are available
•Virtual Dolby/3D Panorama*
•Full function Teletext* (Fastext, Toptext)
•It is possible to connect headphone*
•Direct channel access*
•A.P.S.* (Automatic Programming System)
•All programmes can be named.
•Programme swapping between last watched two programmes.
•Forward or backward automatic tuning.
•Sleep timer.
•Automatic sound mute when no transmission.
•When no valid signal is detected, after 5 minutes the TV switches itself automaticall to stand-by mode.
•WSS* (Wide Screen Signalling)
•NTSC Playback*
•Front or Back SVHS* is available
•Back AV in and Back AV out or Front AV in or Front AV in and Back AV our is available*
•It is possible to connect external speaker*

AK37 BLOCK DIAGRAM

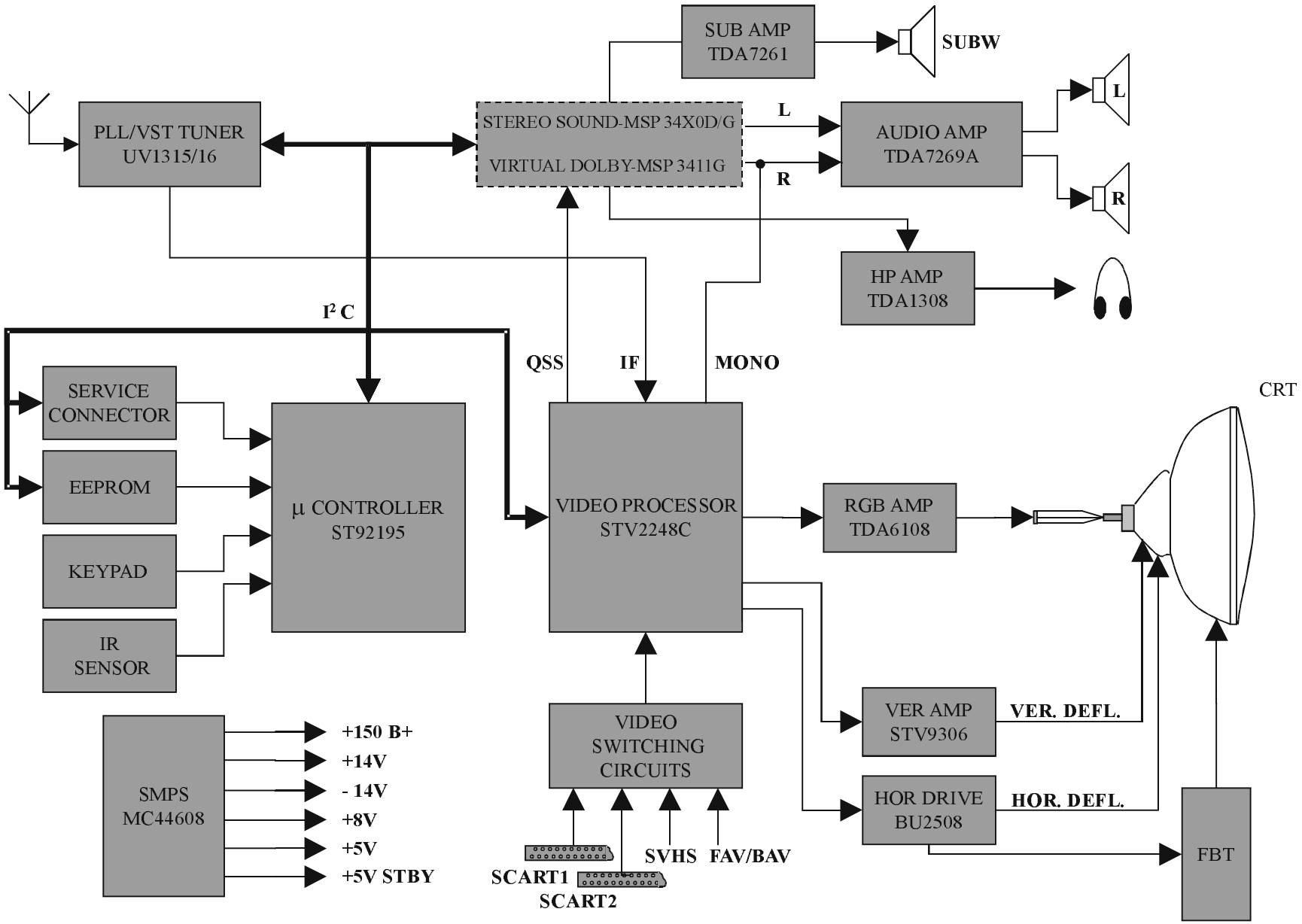

AK37 SMPS BLOCK DIAGRAM

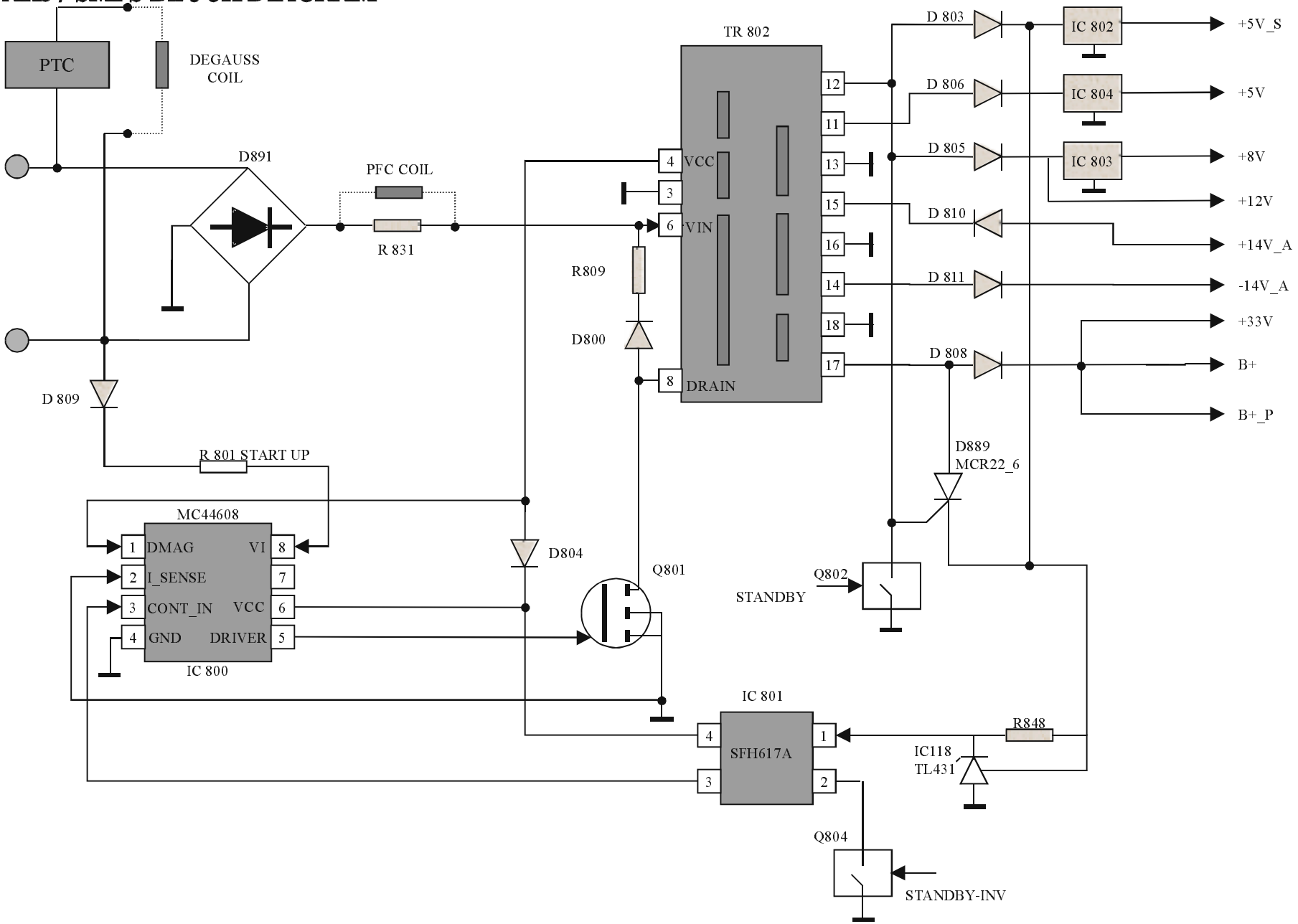

AK37 µCONTROLLER BLOCK DIAGRAM

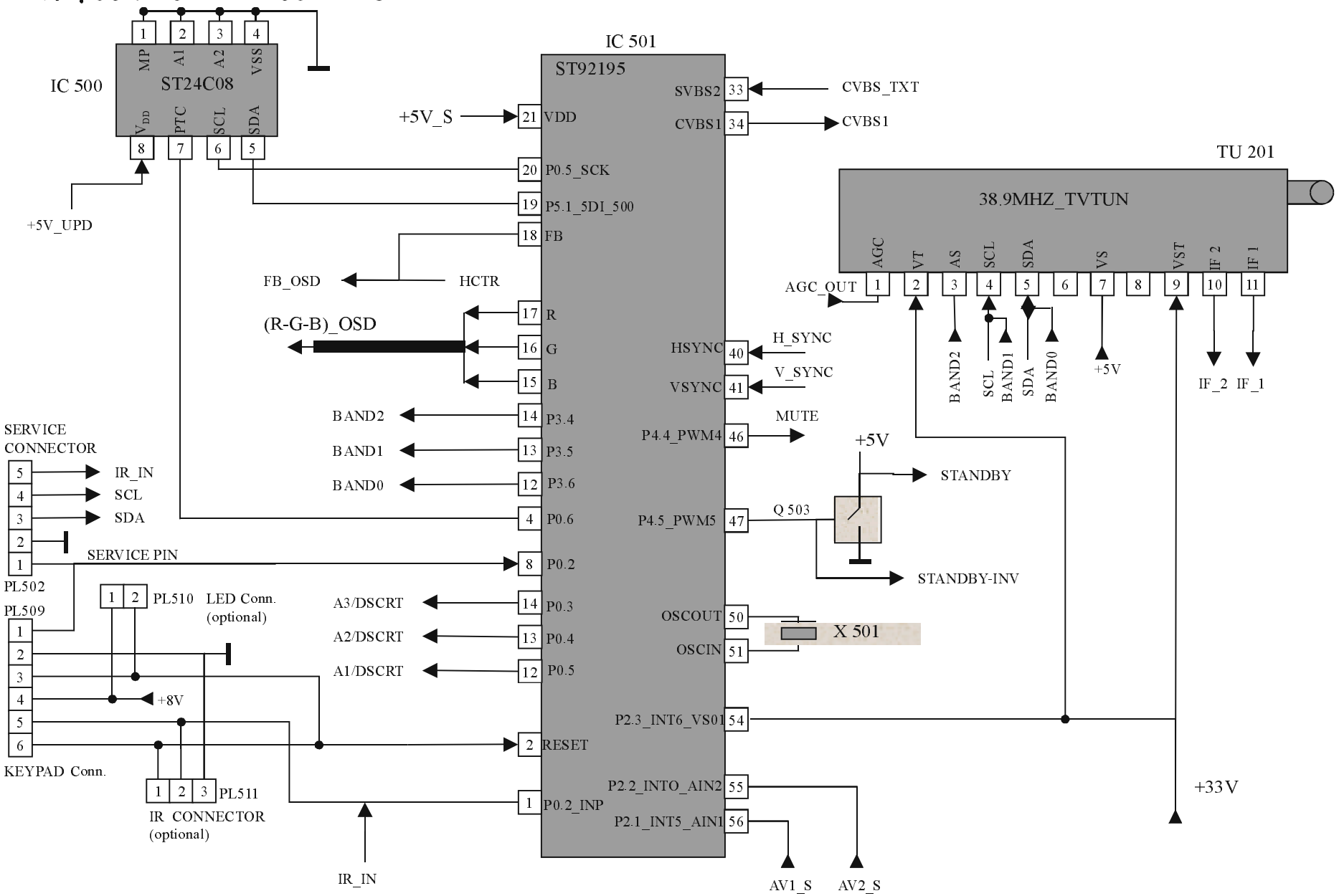

AK37 VIDEO BLOCK DIAGRAM

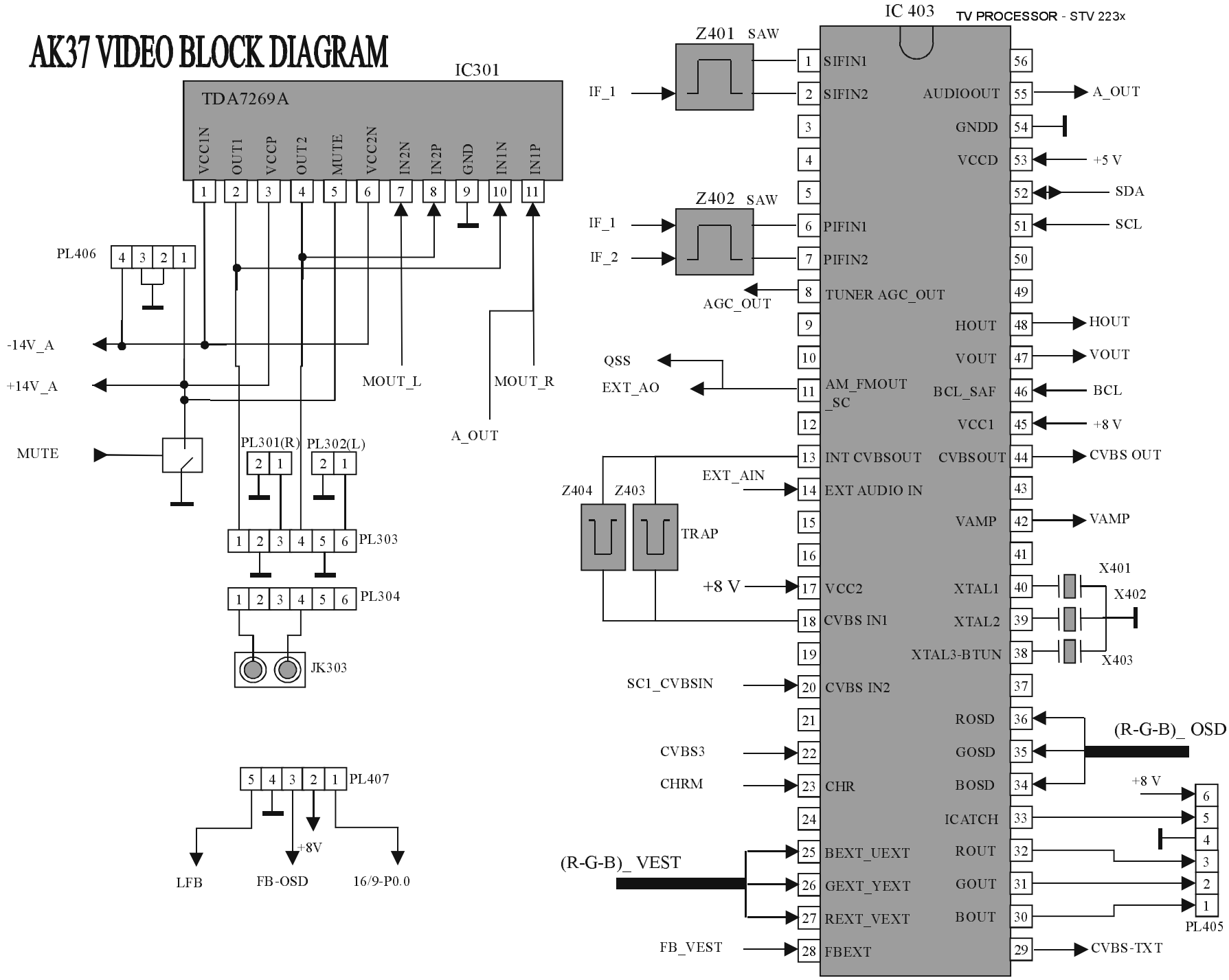

AK37 STEREO BLOCK DIAGRAM

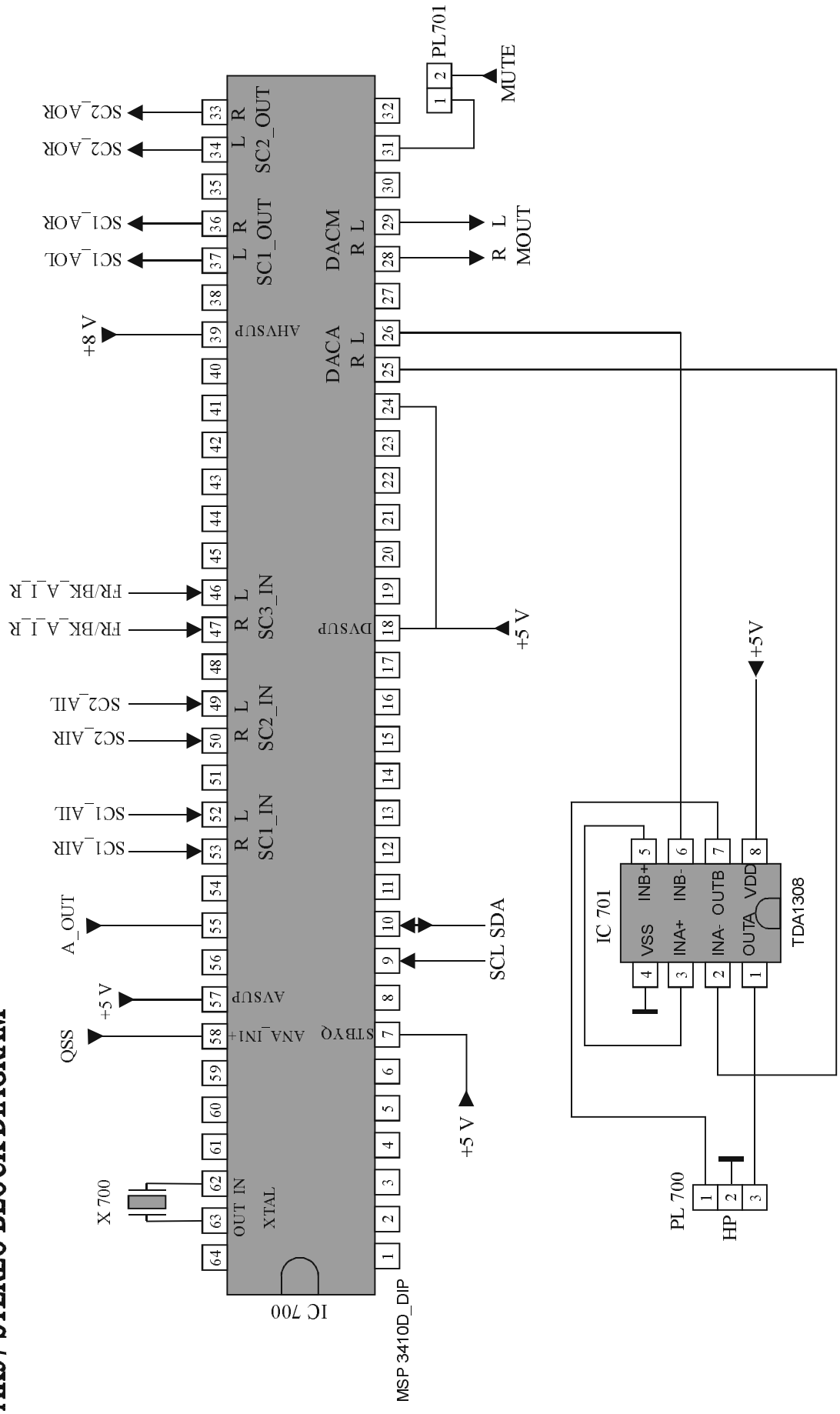

AK37 SCART BLOCK DIAGRAM

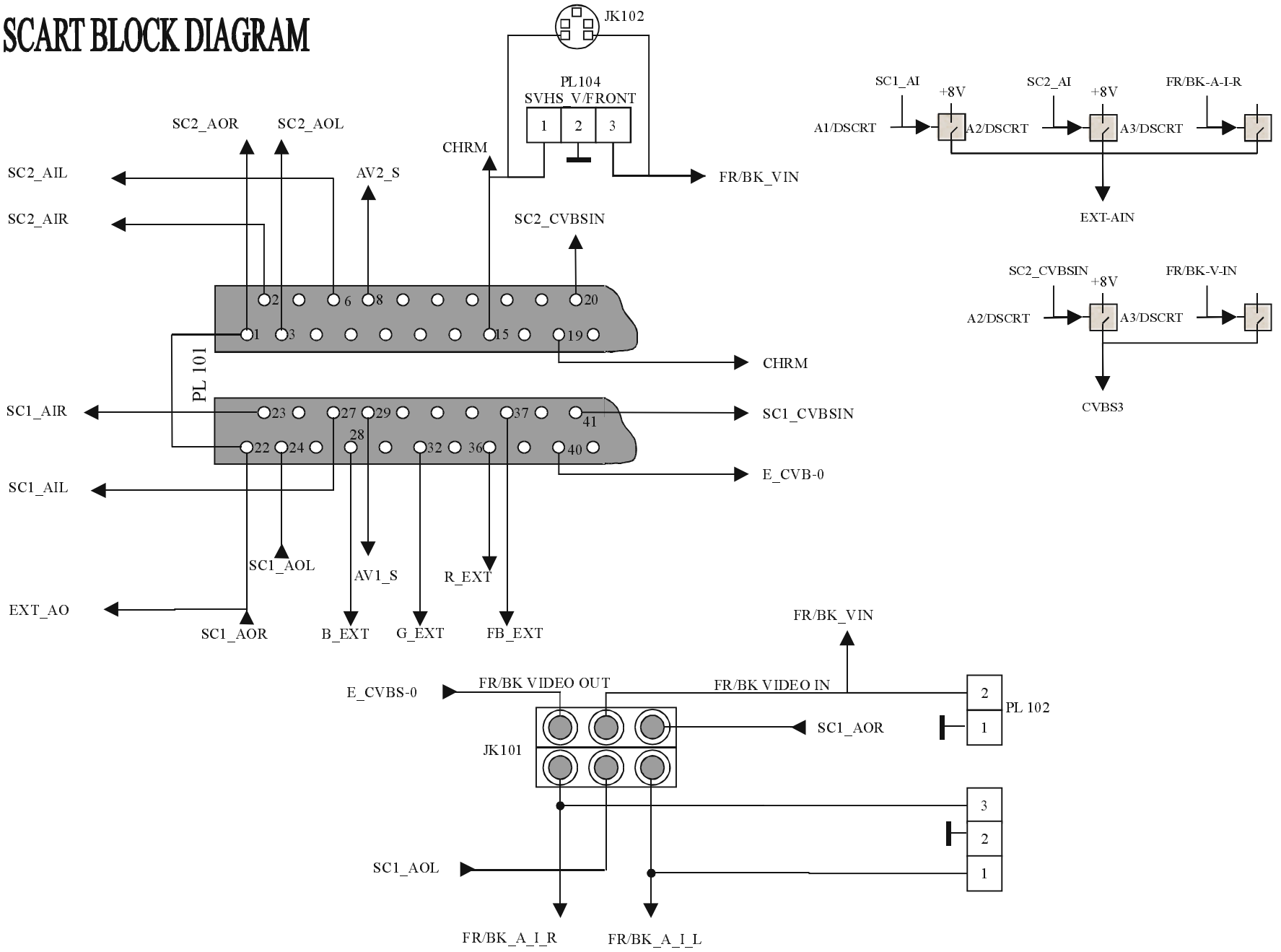

AK37 DEFLECTION BLOCK DIAGRAM

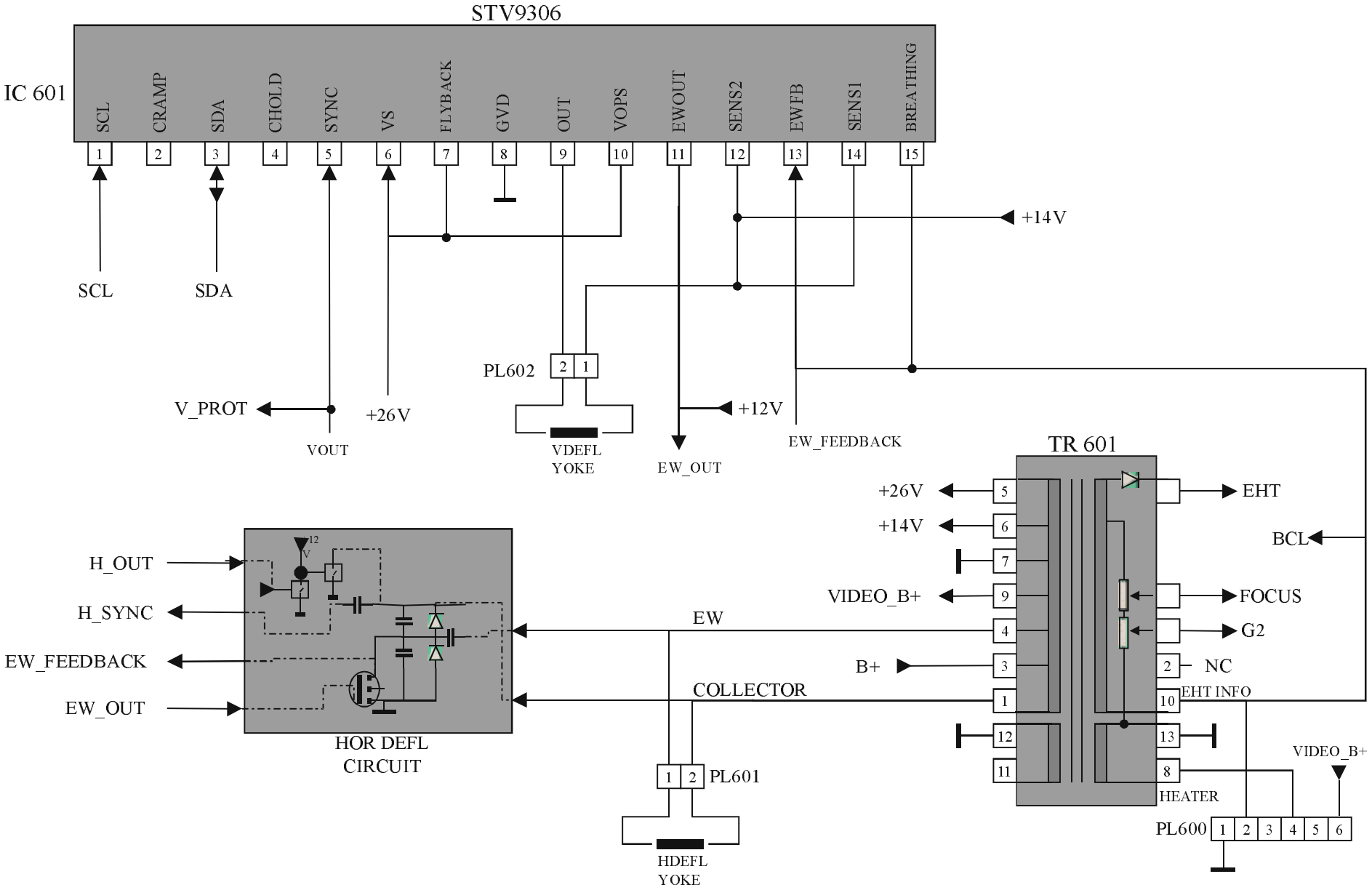

AK37 BASE BOARD BLOCK DIAGRAM

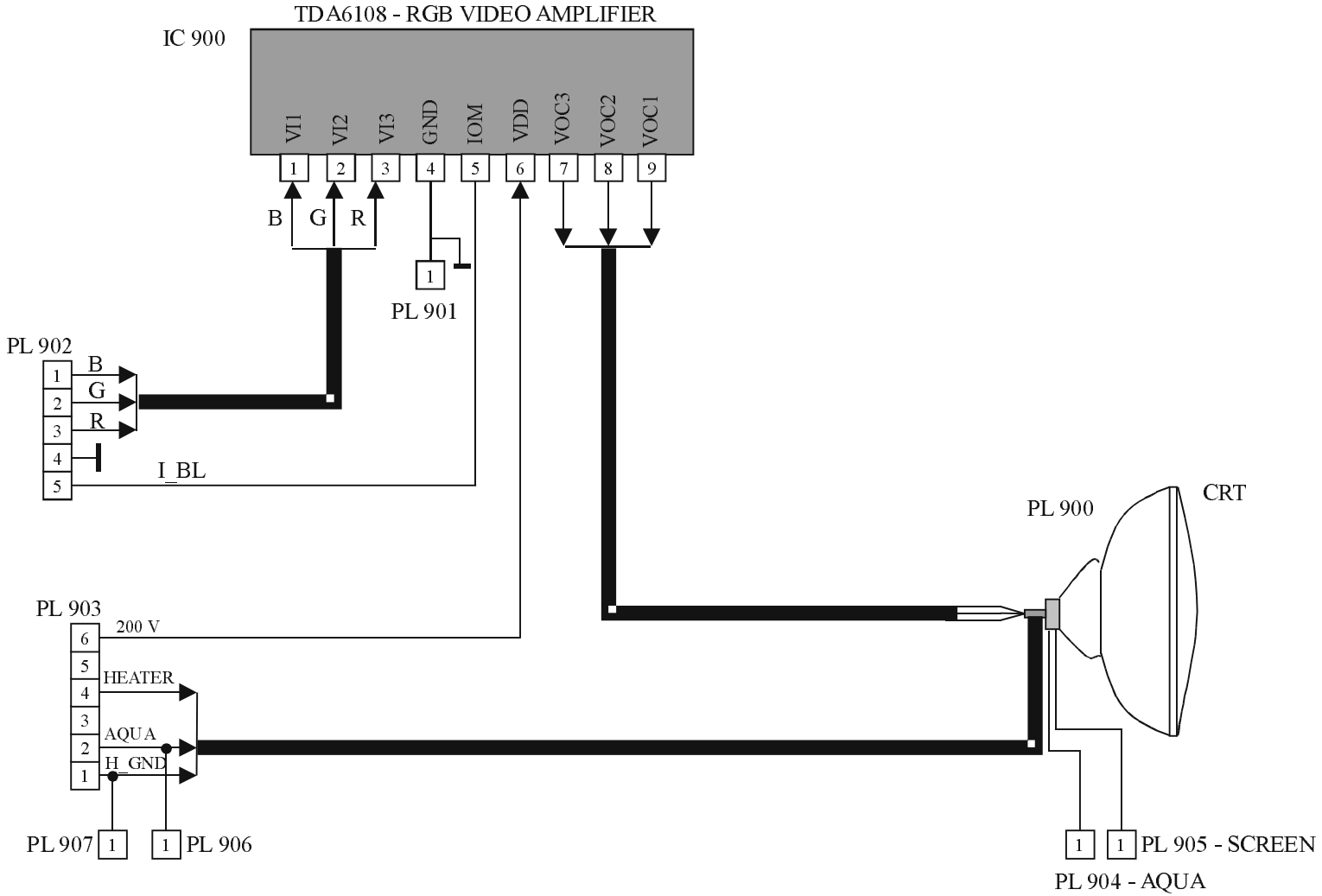

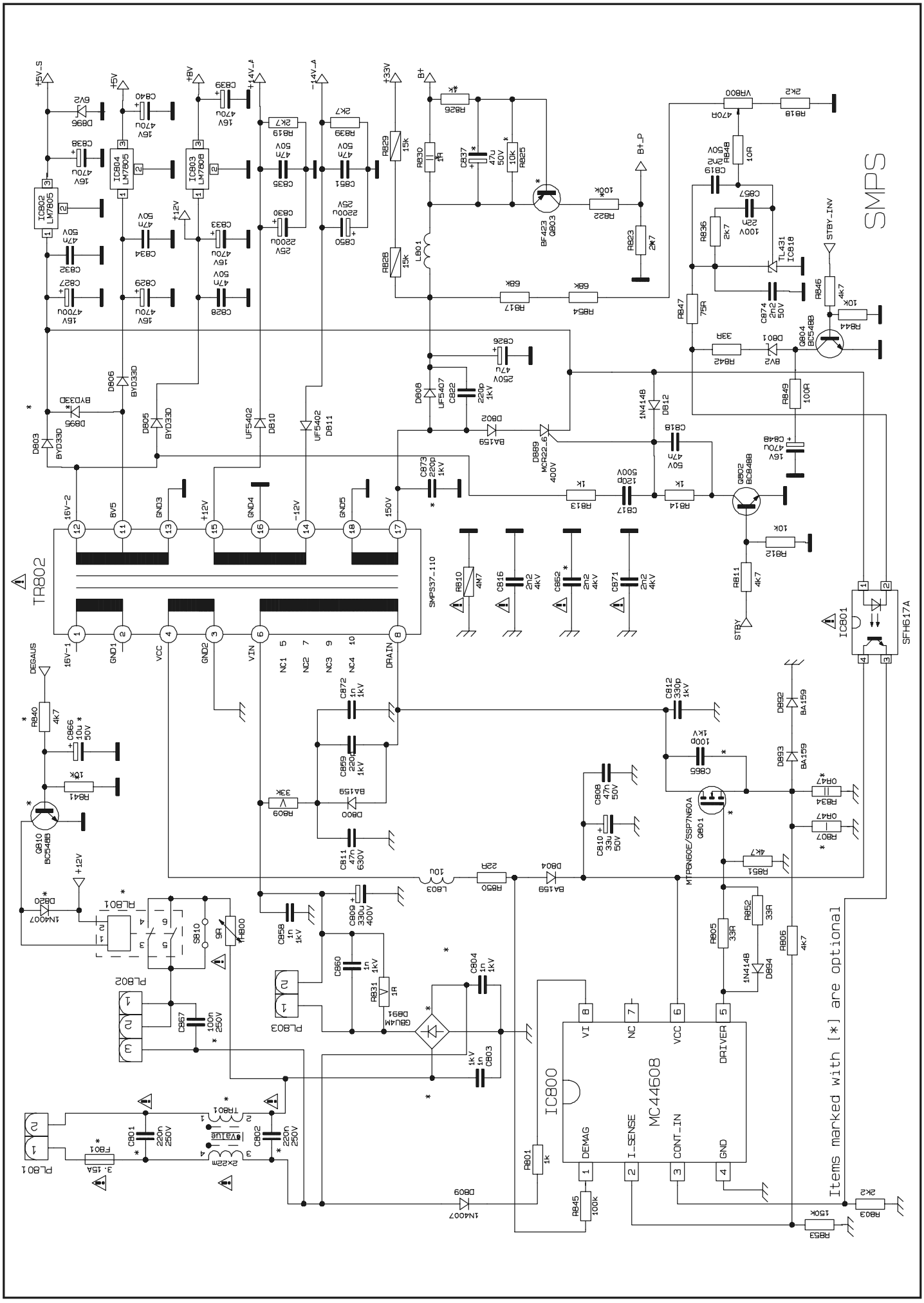
SMPS
TR802
SMPS37-110
IC800
MC44608
VI
NC
VCC
DRIVER
DEMAG
I-SENSE
CONT_IN
GND
IC801
SFH617A
MTP8N60E/SSP7N60A
Items marked with [*] are optional

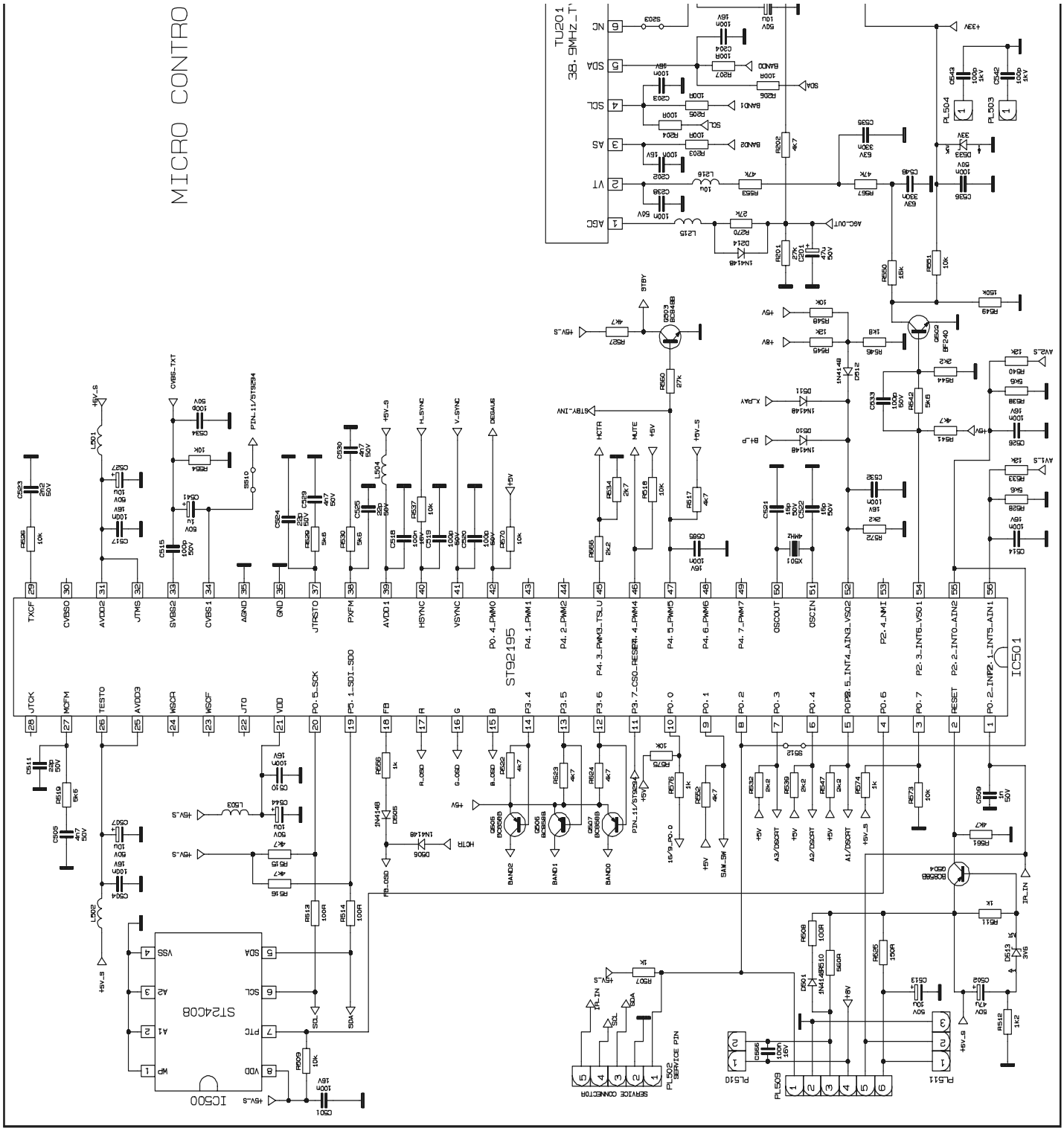
MICRO CONTRO
ST92195
IC501
ST24C08
IC500
TU201
38.9MHz_T
SERVICE CONNECTOR
PL502
SERVICE PIN

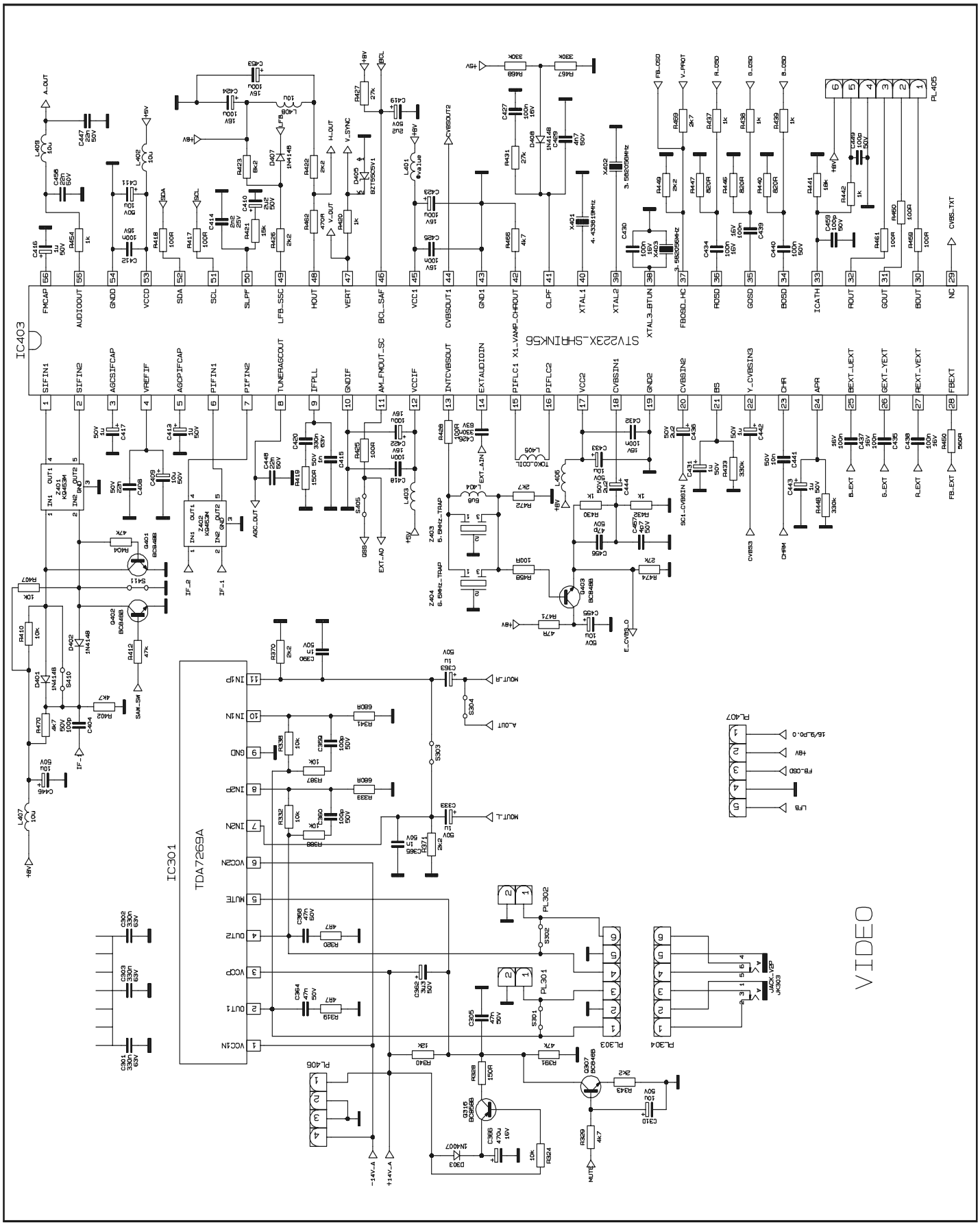
VIDEO
IC403
STV2234_SHRINK56
IC301
TDA7269A

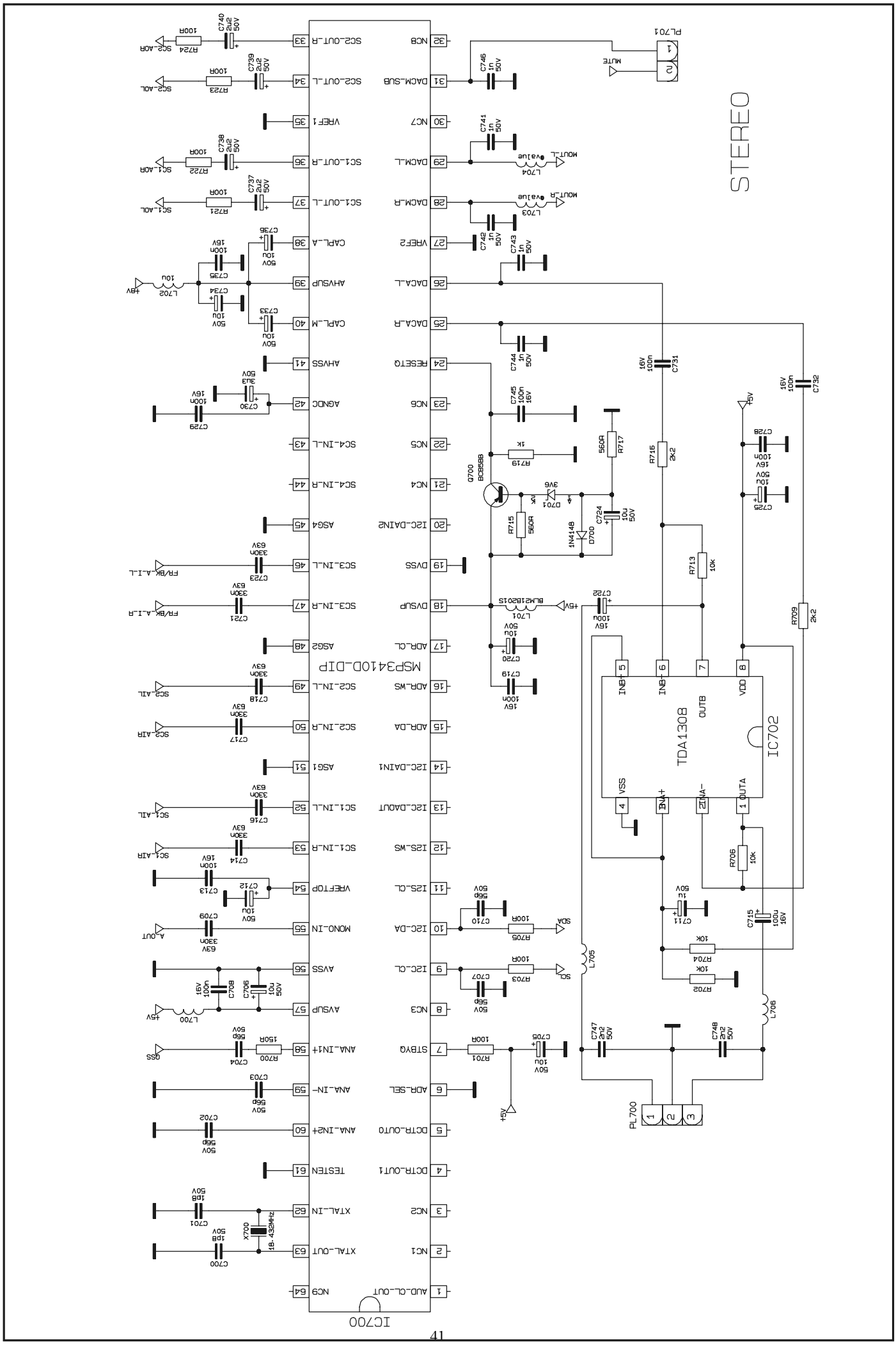
STEREO
MSP3410D_DIP
IC700
TDA1308
IC702
PL700
PL701
Q700
BC858B
X700
18.432MHz

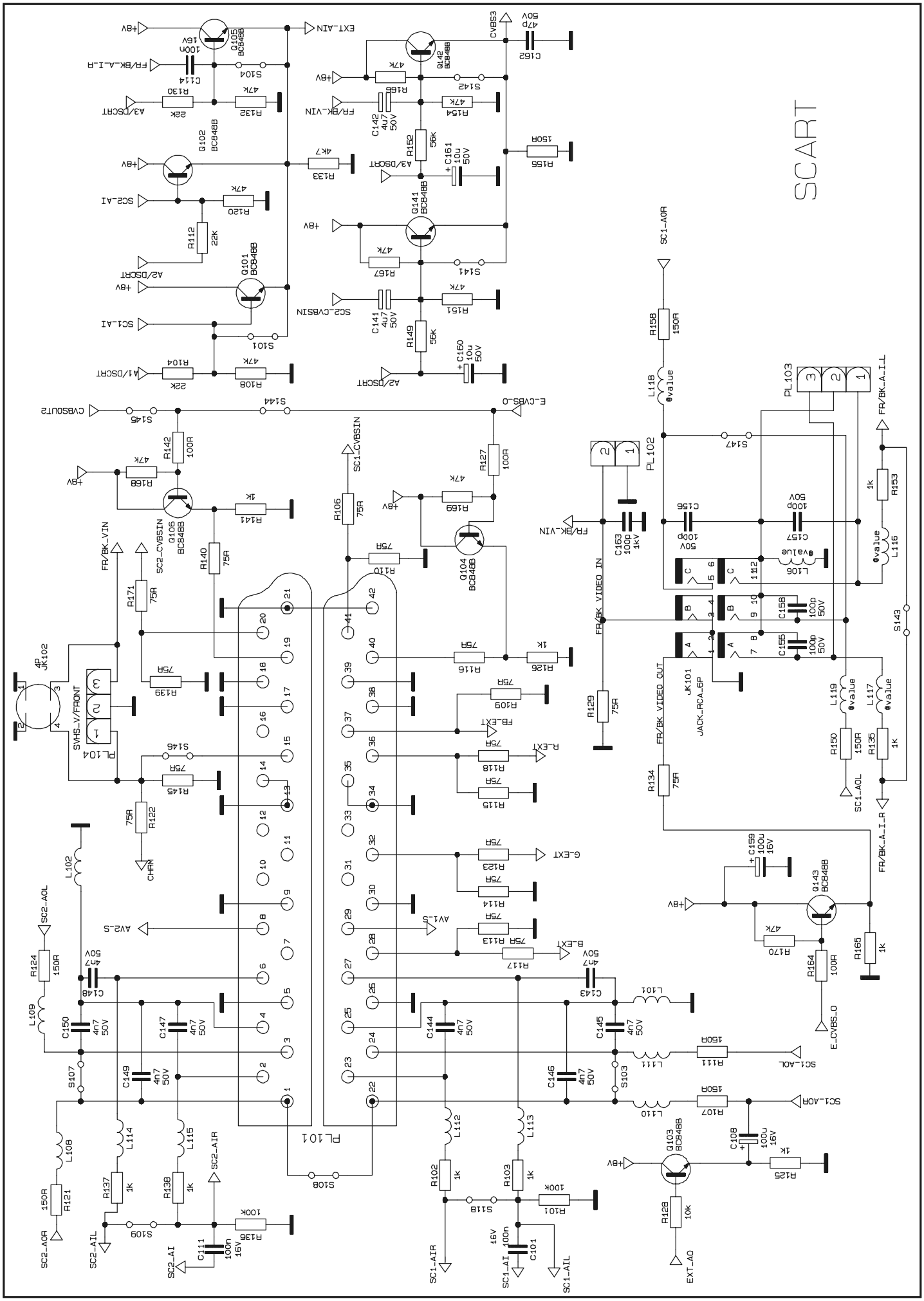
SCART
PL101
PL102
PL103
PL104
JK101
JACK_RCA_6P
JK102
SVHS_V/FRONT
Q101 BC848B
Q102 BC848B
Q103 BC848B
Q104 BC848B
Q105 BC848B
Q106 BC848B
Q141 BC848B
Q142 BC848B
Q143 BC848B
EXT_AIN
CVBS3
CVBSOUT2
E_CVBS_O
SC1_CVBSIN
SC2_CVBSIN
SC1_AOR
SC1_AOL
SC1_AIR
SC1_AIL
SC2_AOR
SC2_AOL
SC2_AIR
SC2_AIL
SC2_AI
SC1_AI
EXT_AO
FR/BK_VIN
FR/BK_A_I_R
FR/BK_A_I_L
FR/BK VIDEO IN
FR/BK VIDEO OUT
FB_EXT
R_EXT
G_EXT
B_EXT
AV1_S
AV2_S
CHRM
A1/DSCRT
A2/DSCRT
A3/DSCRT
SC1_AI
SC2_AI
+8V

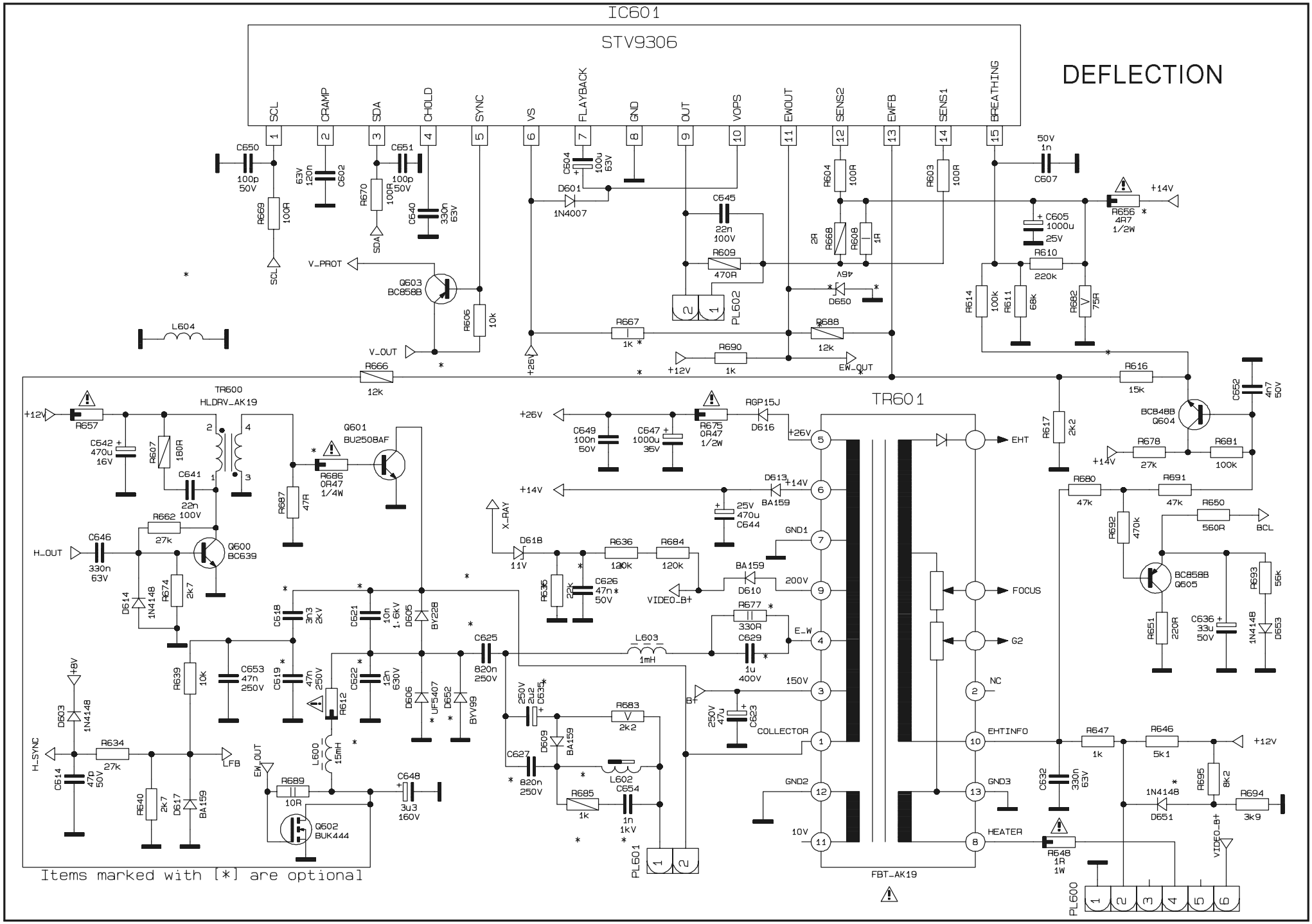
DEFLECTION
IC601
STV9306
SCL
CRAMP
SDA
CHOLD
SYNC
VS
FLAYBACK
GND
OUT
VOPS
EWOUT
SENS2
EWFB
SENS1
BREATHING
TR601
TR600
HLDRV_AK19
FBT_AK19
EHT
FOCUS
G2
NC
EHTINFO
GND3
HEATER
COLLECTOR
GND1
GND2
10V
200V
150V
E_W
+26V
+14V
+12V
+8V
V_PROT
V_OUT
EW_OUT
H_OUT
H_SYNC
LFB
X_RAY
VIDEO_B+
BCL
PL600
PL601
PL602
Q601
BU2508AF
Q602
BUK444
Q603
BC858B
Q604
BC858B
Q605
BC639
Items marked with [*] are optional

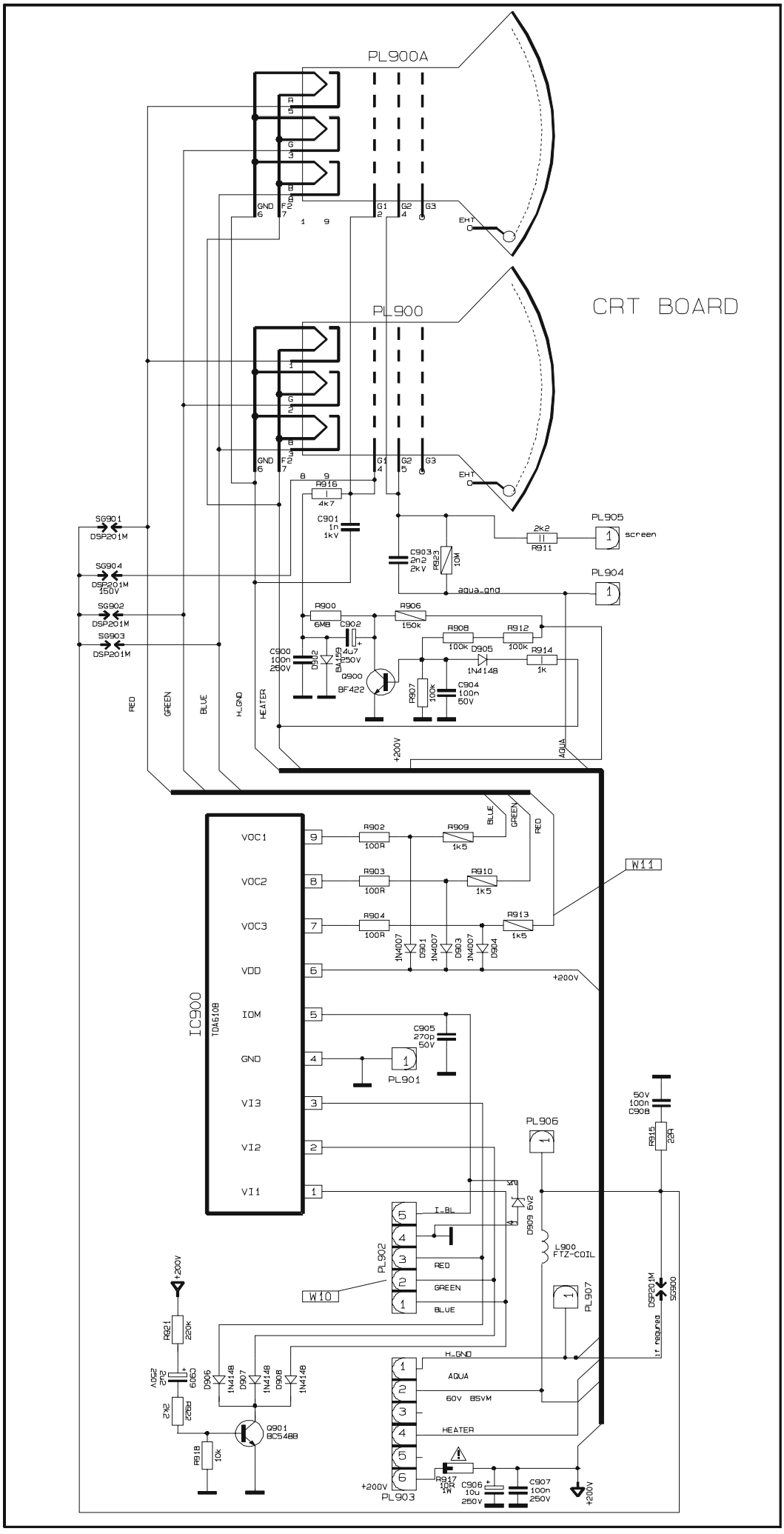
CRT BOARD
PL900A
PL900
IC900
TDA6108
VOC1
VOC2
VOC3
VDD
IOM
GND
VI3
VI2
VI1
PL901
PL902
PL903
PL904
PL905
PL906
PL907
W10
W11
L900
FTZ-COIL
Q900
BF422
Q901
BC548B
RED
GREEN
BLUE
H_GND
HEATER
AQUA
60V BSVM
+200V
screen
aqua_gnd
if required

MAIN BOARD	11AK37
SHEET	002/Video
VERSION	10
DATE	13. 12. 2002

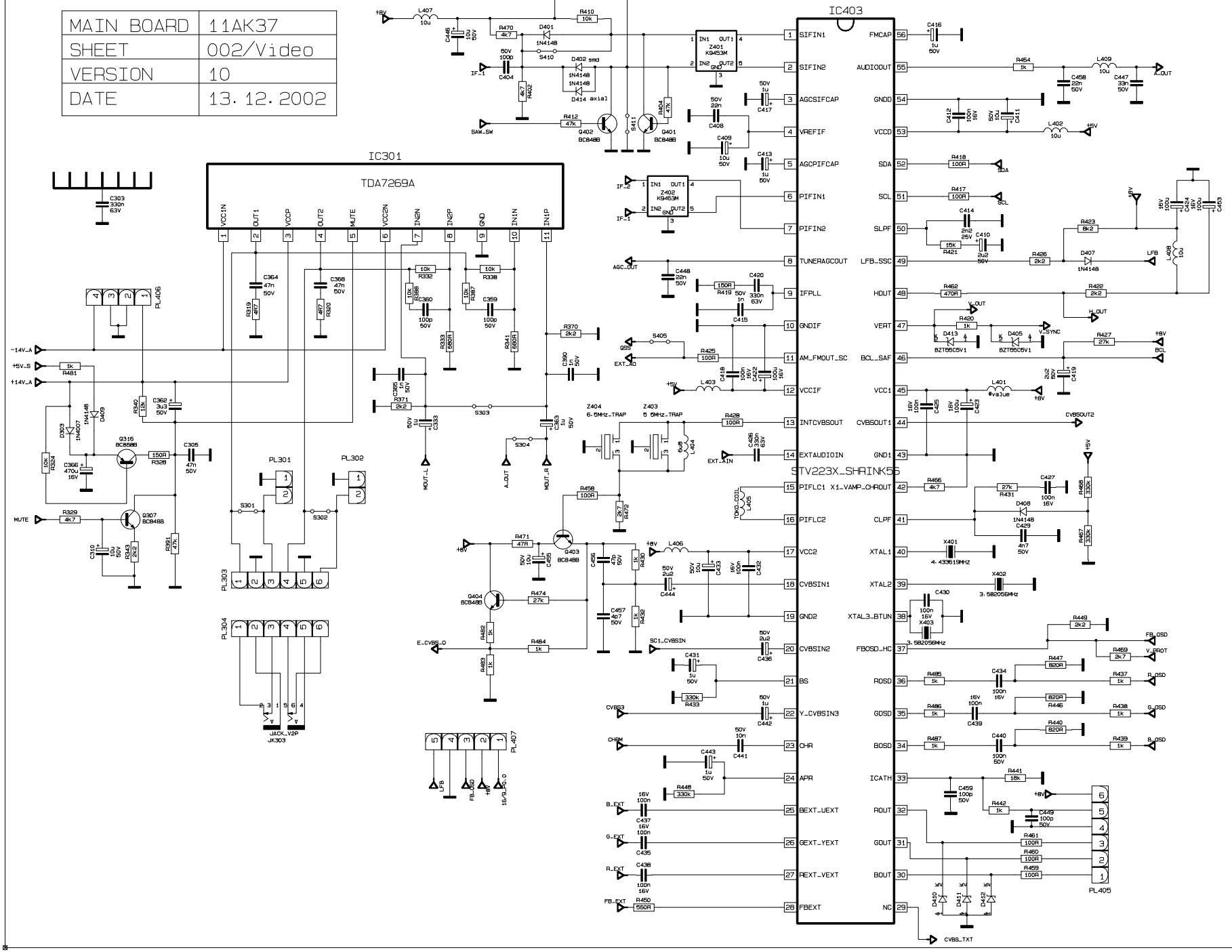

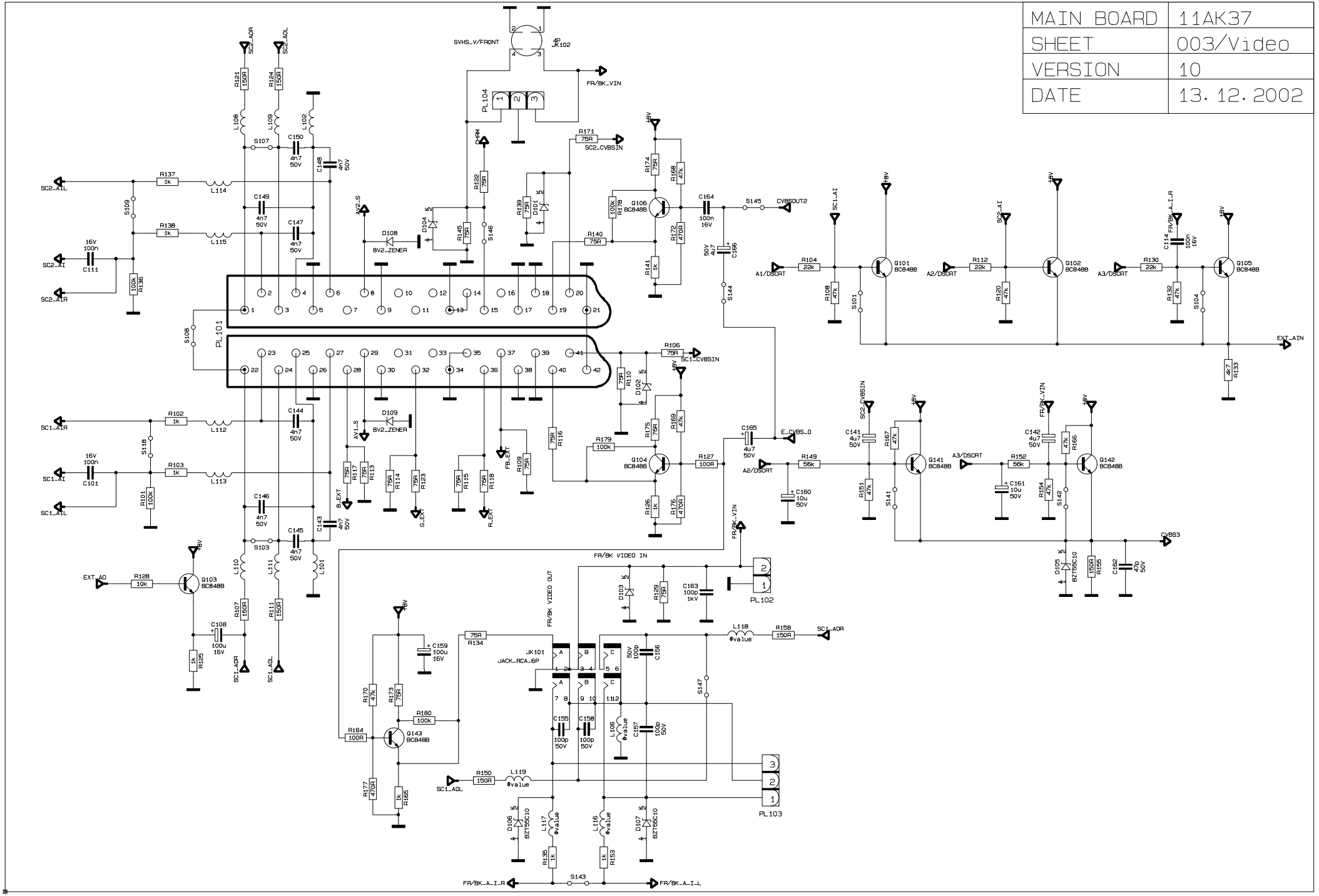
MAIN BOARD 11AK37
SHEET 003/Video
VERSION 10
DATE 13. 12. 2002
SVHS_V/FRONT
JK102
FR/BK_VIN
PL104
PL101
PL102
PL103
SC2_AOR
SC2_AOL
SC2_CVBSIN
SC1_CVBSIN
CVBSOUT2
EXT_AIN
CVBS3
E_CVBS_0
FR/BK VIDEO IN
FR/BK VIDEO OUT
SC2_AIL
SC2_AIR
SC2_AI
SC1_AIR
SC1_AI
SC1_AIL
SC1_AOR
SC1_AOL
EXT_AO
A1/DSCRT
A2/DSCRT
A3/DSCRT
FR/BK_A_I_R
FR/BK_A_I_L
JACK_RCA_6P
BV2_ZENER
BC848B
BZT55C10
+8V
S101
S103
S104
S107
S108
S109
S118
S141
S142
S143
S144
S145
S146
S147

MAIN BOARD	11AK37
SHEET	004/HV
VERSION	10
DATE	13. 12. 2002

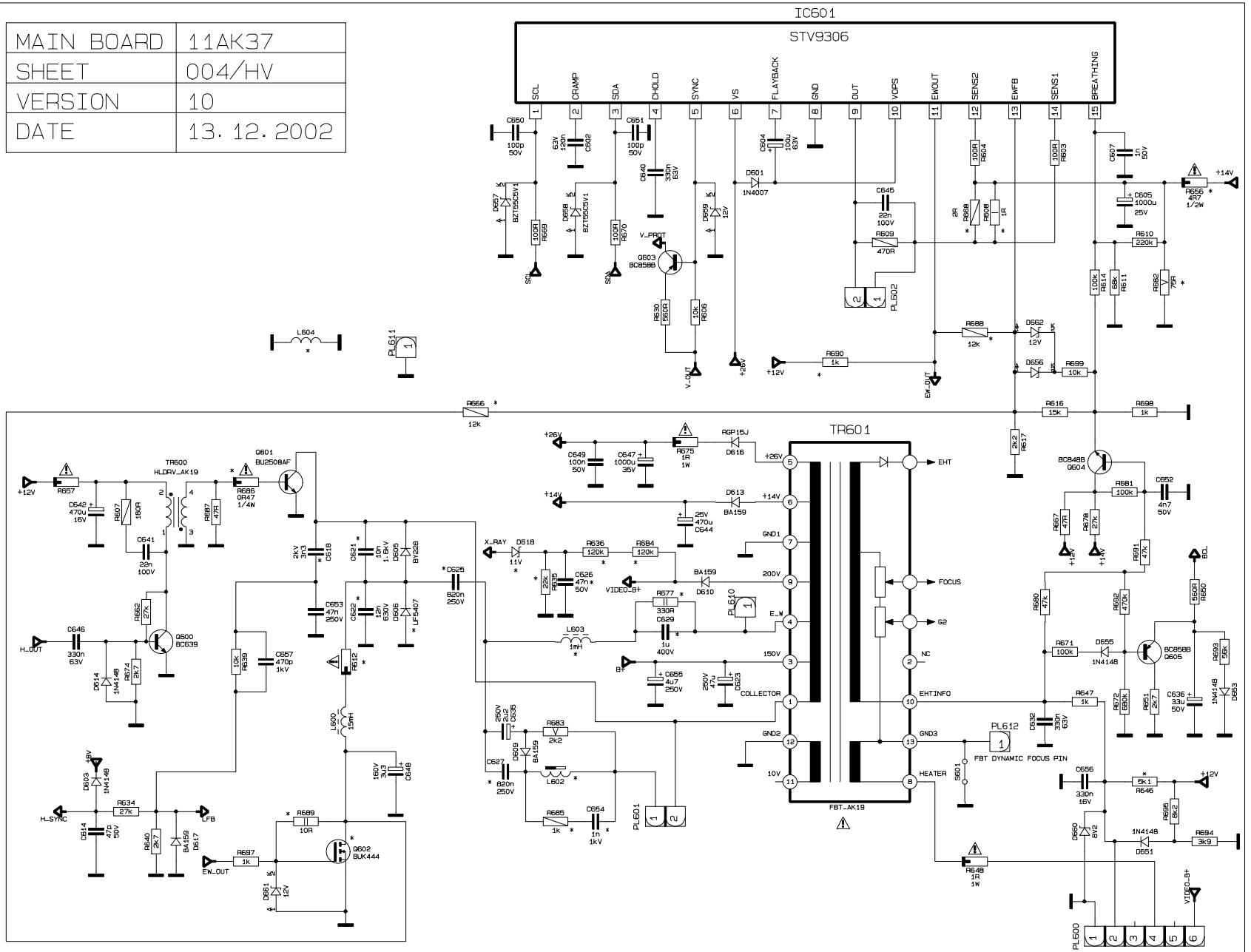

Items marked with [*] are optional

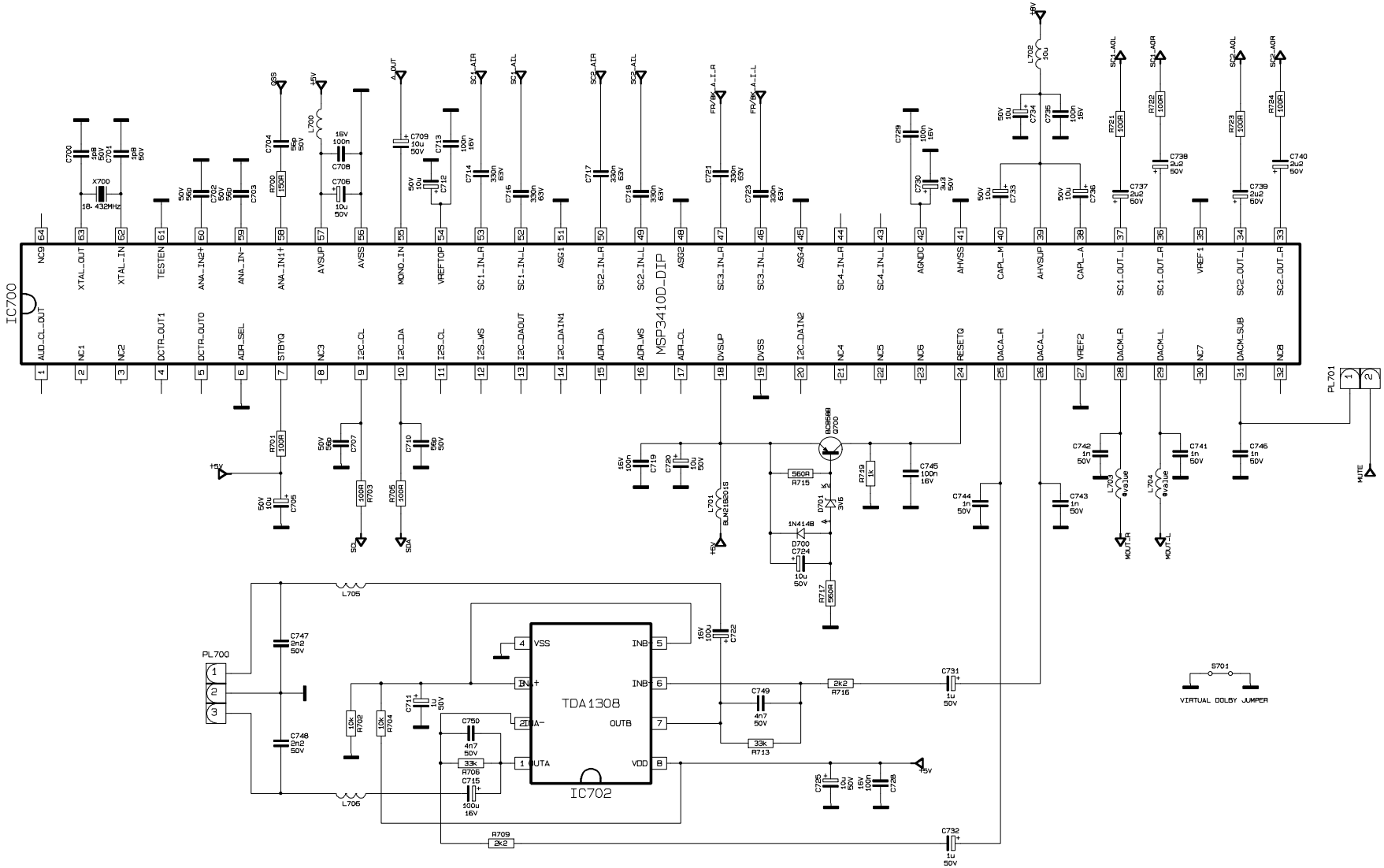

MAIN BOARD	11AK37
SHEET	007/Stereo
VERSION	10
DATE	13. 12. 2002

MAIN BOARD	11AK37
SHEET	006/SMPS
VERSION	10
DATE	13. 12. 2002

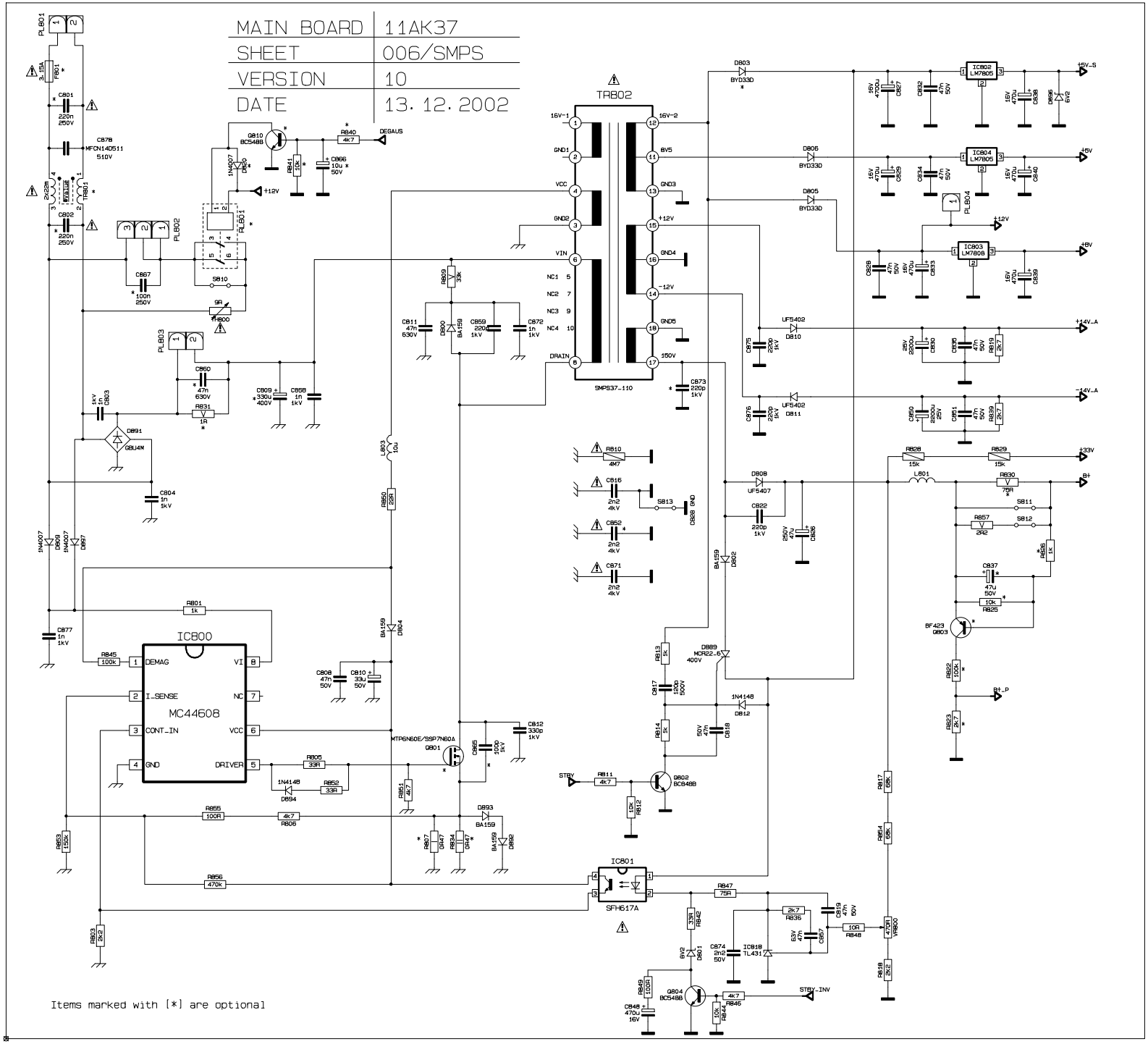

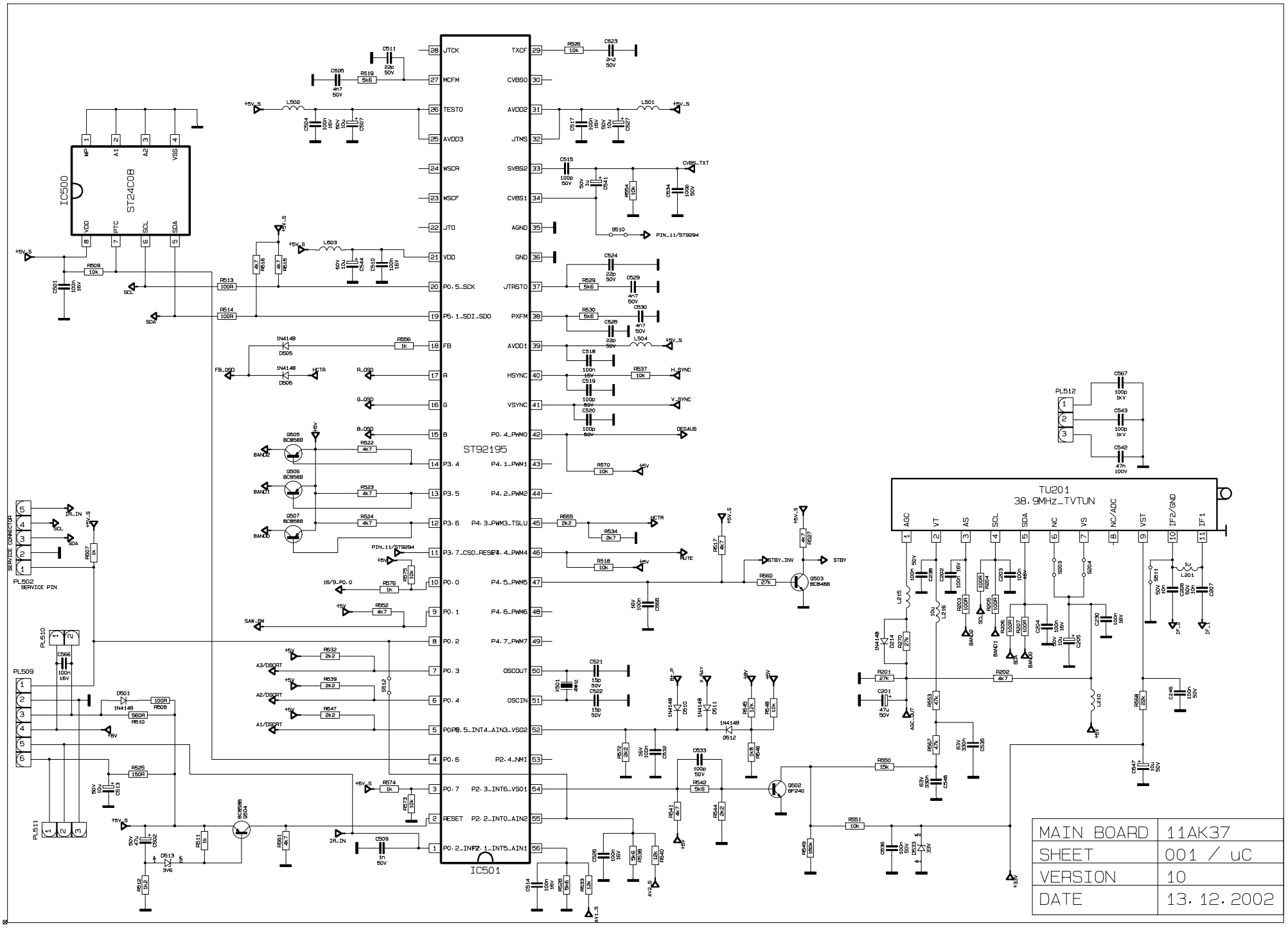
ST92195
IC501
IC500
ST24C08
TU201
38.9MHz_TVTUN
PL512
PL509
PL510
PL511
PL502
SERVICE PIN
SERVICE CONNECTOR
JTCK
MCFM
TESTO
AVDD3
WSCR
WSCF
JTO
VDD
P0.5_SCK
P5.1_SDI_SDO
FB
R
G
B
P3.4
P3.5
P3.6
P3.7_CSO_RESET
P0.0
P0.1
P0.2
P0.3
P0.4
P0.5_INT4_AIN3_VSO2
P0.6
P0.7
RESET
P0.2_INT2
P2.1_INT5_AIN1
TXCF
CVBSO
AVDD2
JTMS
SVBS2
CVBS1
AGND
GND
JTRSTO
PXFM
AVDD1
HSYNC
VSYNC
P0.4_PWM0
P4.1_PWM1
P4.2_PWM2
P4.3_PWM3_TSLU
P4.4_PWM4
P4.5_PWM5
P4.6_PWM6
P4.7_PWM7
OSCOUT
OSCIN
P2.4_NMI
P2.3_INT6_VSO1
P2.2_INT0_AIN2
PIN_11/ST9294
CVBS_TXT
DEGAUS
MUTE
STBY_INV
STBY
AGC
VT
AS
SCL
SDA
NC
VS
NC/ADC
VST
IF2/GND
IF1
MAIN BOARD 11AK37
SHEET 001 / uC
VERSION 10
DATE 13.12.2002

MAIN BOARD	11AK37
SHEET	004/HV
VERSION	5
DATE	24.01.2002

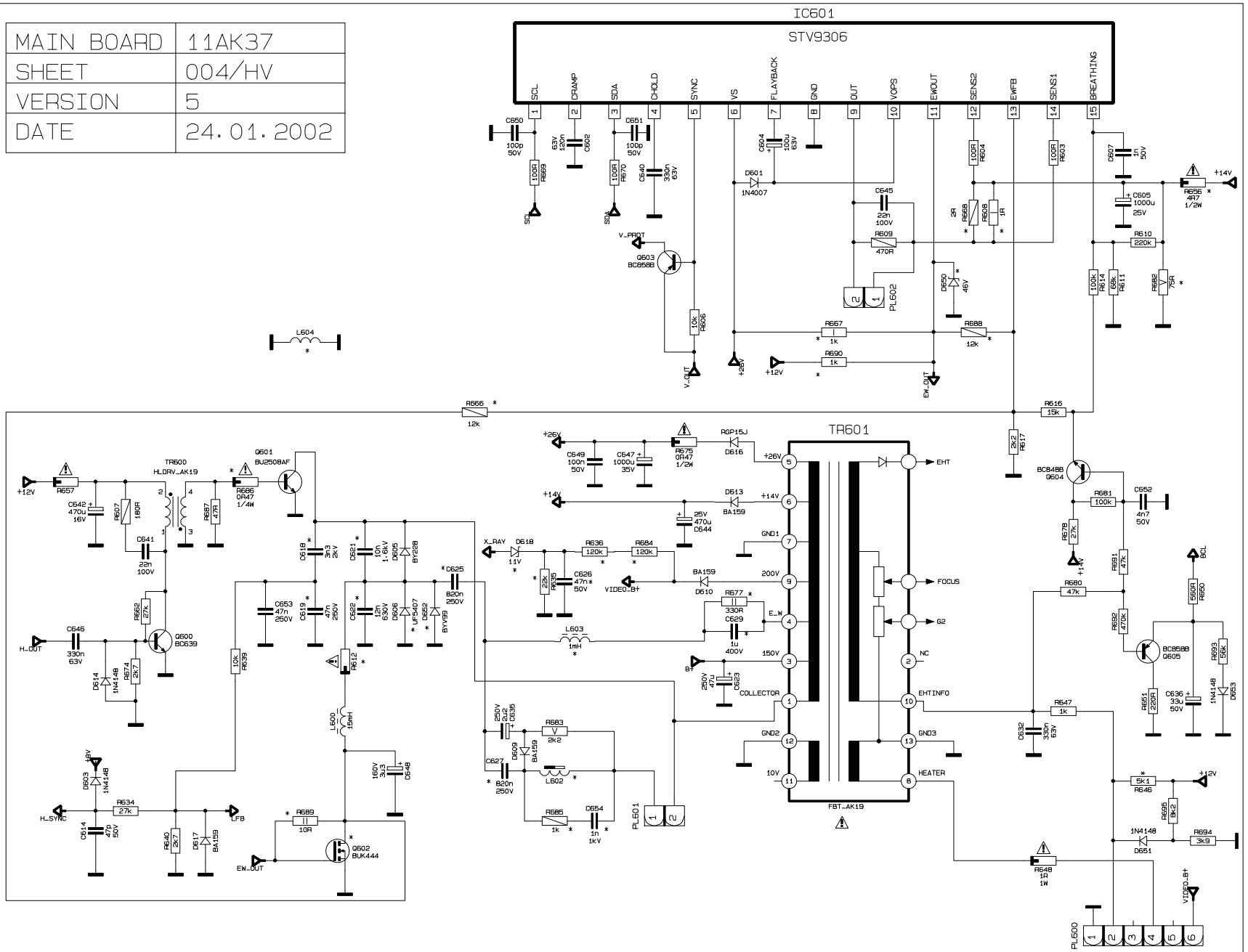

Items marked with (*) are optional

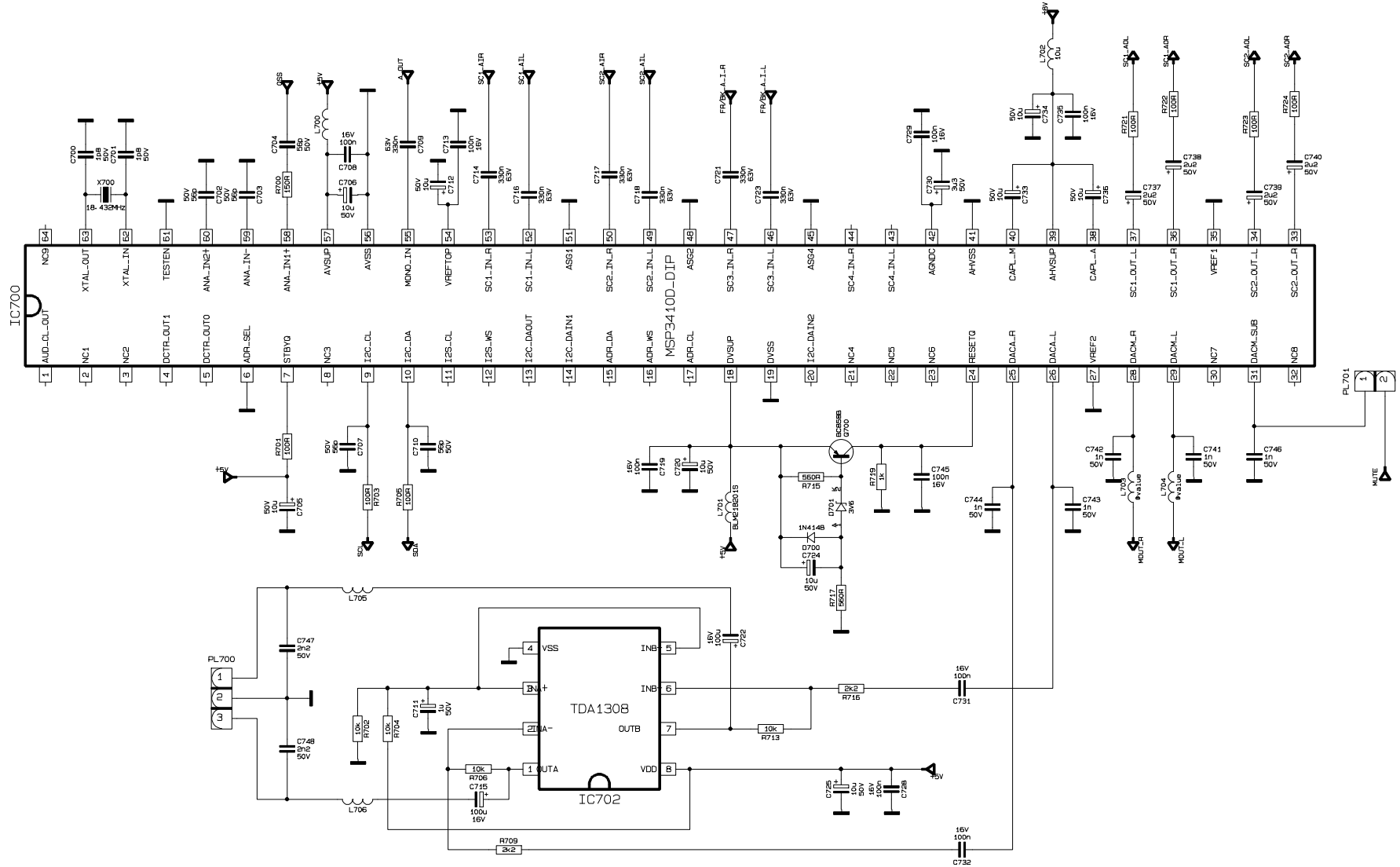

MAIN BOARD	11AK37
SHEET	007/Stereo
VERSION	5
DATE	14.01.2002

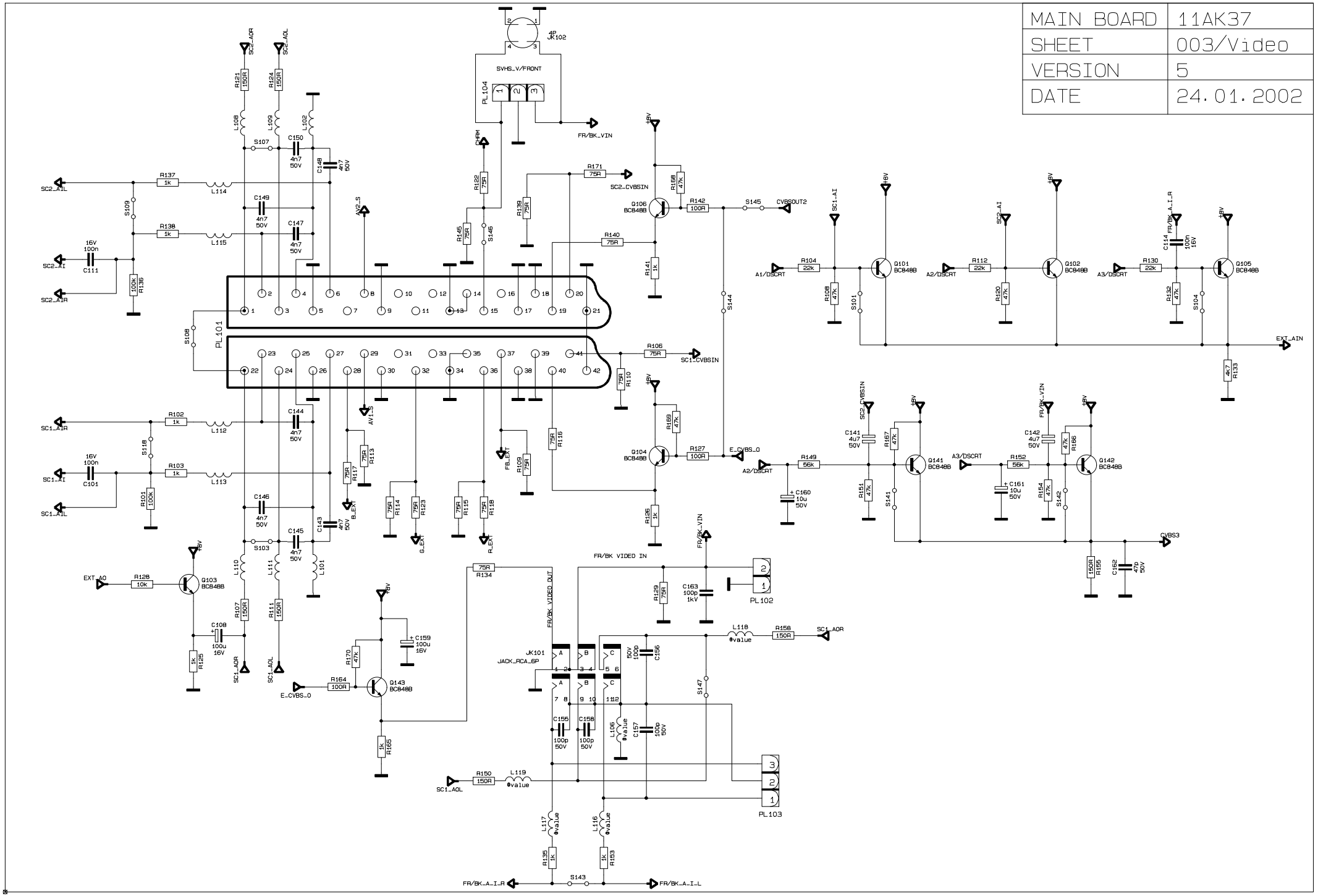
MAIN BOARD 11AK37
SHEET 003/Video
VERSION 5
DATE 24.01.2002
SVHS_V/FRONT
PL104
JK102
FR/BK_VIN
SC2_AOR
SC2_AOL
SC2_CVBSIN
SC1_CVBSIN
CVBSOUT2
EXT_AIN
CVBS3
PL101
PL102
PL103
JK101
JACK_RCA_6P
FR/BK VIDEO IN
FR/BK VIDEO OUT
SC1_AOR
SC1_AOL
FR/BK_A_I_R
FR/BK_A_I_L
E_CVBS_O
A1/DSCRT
A2/DSCRT
A3/DSCRT
EXT_AO
SC2_AIL
SC2_AI
SC2_AIR
SC1_AIR
SC1_AI
SC1_AIL
+8V
Q101 BC848B
Q102 BC848B
Q103 BC848B
Q104 BC848B
Q105 BC848B
Q106 BC848B
Q141 BC848B
Q142 BC848B
Q143 BC848B

MAIN BOARD	11AK37
SHEET	006/SMPS
VERSION	5
DATE	14.01.2002

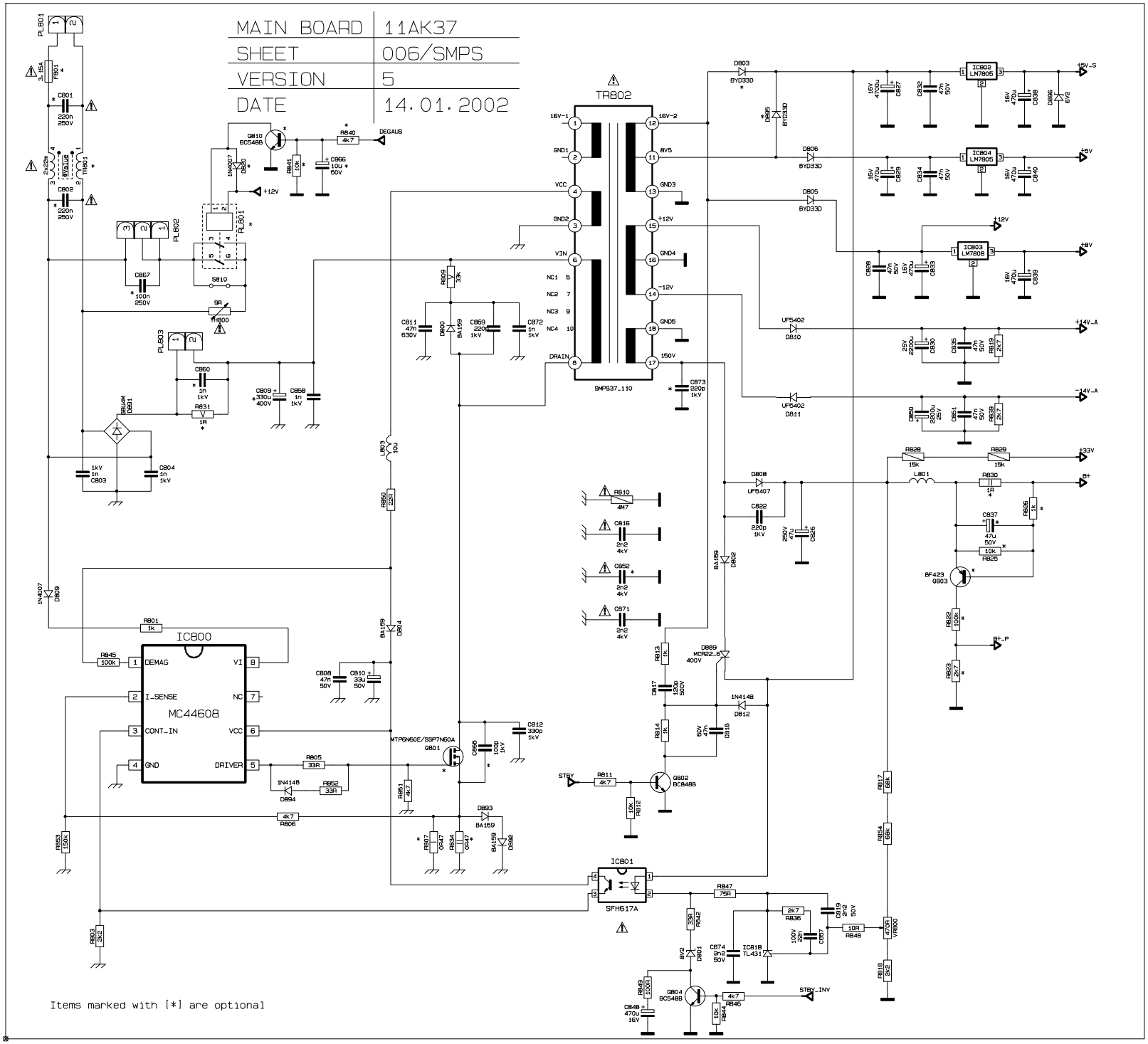

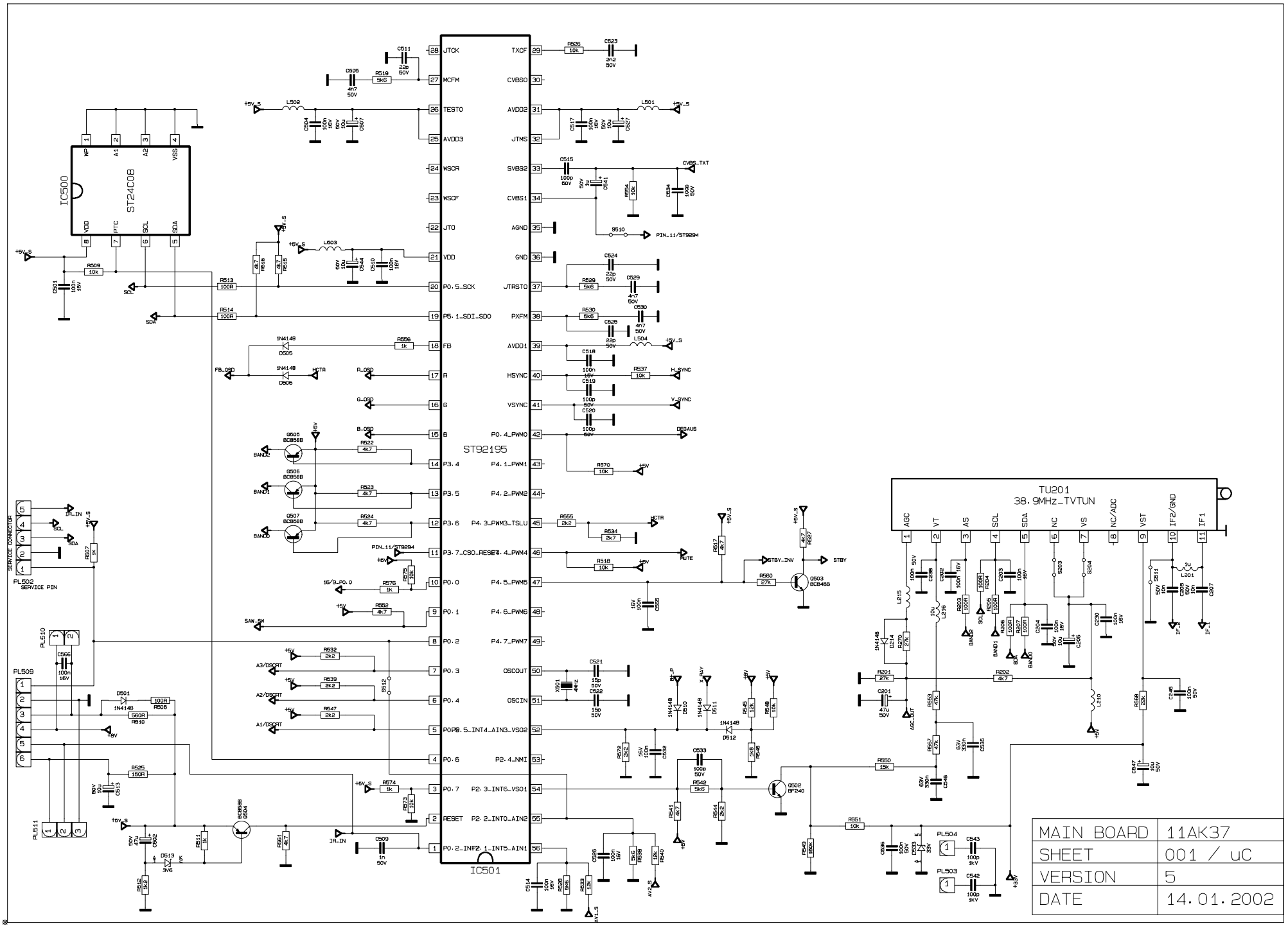
IC501
ST92195
IC500
ST24C08
TU201
38.9MHz_TVTUN
MAIN BOARD 11AK37
SHEET 001 / uC
VERSION 5
DATE 14.01.2002

MAIN BOARD	11AK37
SHEET	002/Video
VERSION	5
DATE	23.01.2002

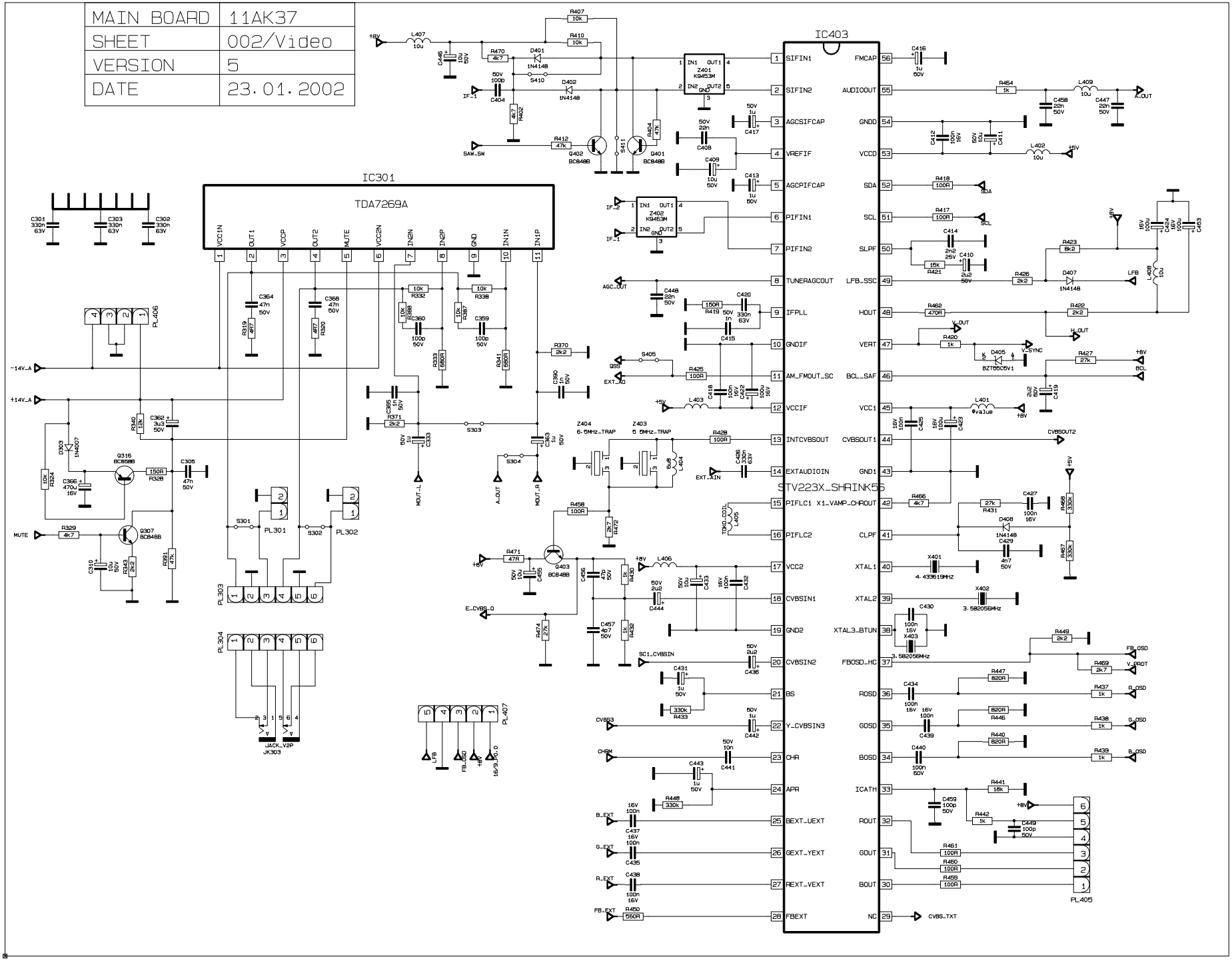

CONTENTS

SAFETY PRECAUTIONS: 2
TV set switched off 2
Measurements 2
PERI-TV SOCKET 2
SCART 1 2
SCART 2 2
1. INTRODUCTION 3
2. SMALL SIGNAL PART WITH STV2248 3
2.1 Vision IF amplifier 3
2.2 QSS Sound circuit (QSS versions) 3
2.3 FM demodulator and audio amplifier (mono versions) 3
2.4 Video switch 4
2.5 Synchronisation circuit 4
2.6 Chroma and luminance processing 4
2.7 RGB output circuit 5
2.8 µ-Controller 5
3. TUNER 6
4- MULTISTANDARD SOUND PROCESSOR 7
5. SOUND OUTPUT STAGE TDA7269A 7
6. VERTICAL OUTPUT STAGE WITH STV9306 7
7. VIDEO OUTPUT AMPLIFIER STV5112 7
8. POWER SUPPLY (SMPS) 7
9. POWER FACTOR CORRECTION 7
10. SERIAL ACCESS CMOS 8K EEPROM 24C08 7
11. CLASS AB STEREO HEADPHONE DRIVER TDA1308 7
12. CLASS AB MONO SUBWOOFER DRIVER TDA7261 7
13. SAW FILTERS 7
14. IC DESCRIPTIONS AND INTERNAL BLOCK DIAGRAM 8

- ST92195 8
- STV224X 10
- UV1315, UV1316, UV1336 11
- TDA7269A 12
- STV9306 13
- STV5112 14
- MC44608 15
- MSP 34XXG 16
- 24C08 17
- TDA1308 17
- TDA7261 17
- SAW FILTERS 18

GENERAL BLOCK DIAGRAM of 11AK37 19
Service menu 20
Options 21
Languages 24

DO NOT CHANGE ANY MODULE UNLESS THE SET IS SWITCHED OFF
The mains supply part of the switch mode power supply's transformer is live.
Use an isolating transformer.
The receiver complies with the safety requirements.

SAFETY PRECAUTIONS:
The service of this TV set must be carried out by qualified persons only. Components marked with the warning symbol on the circuit diagram are critical for safety and must only be replaced with an identical component.
- Power resistor and fused resistors must be mounted in an identical manner to the original component.

TV set switched off:
Make short-circuit between HV-CRT clip and CRT ground layer.
Short C809 before changing IC800 and IC801 or other components in primary side of the SMPS part.

Measurements:
Voltage readings and oscilloscope traces are measured under the following conditions:
Antenna signal's level is 60dB at the color bar pattern from the TV pattern generator. (100% white, 75% color saturation)
Brightness, contrast, and color are adjusted for normal picture performance.
Mains supply, 220VAC, 50Hz.

PERI-TV SOCKET

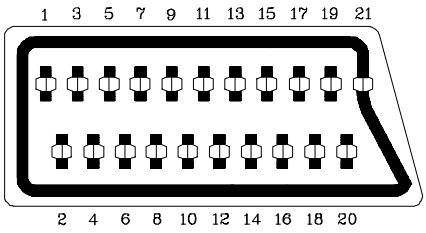

SCART 1 PINING

1 Audio right output	0.5Vrms / 1K
2 Audio right input	0.5Vrms / 10K
3 Audio left output	0.5Vrms / 1K
4 Ground AF	
5 Ground Blue	
6 Audio left input	0.5Vrms / 10K
7 Blue input	0.7Vpp / 75ohm
8 AV switching input	0-12VDC /10K
9 Ground Green	
10 -	
11 Green input	0.7Vpp / 75ohm
12 -	
13 Ground Red	
14 Ground Blanking	
15 Red input	0.7Vpp / 75ohm
16 Blanking input	0-0.4VDC, 1-3VDC / 75 Ohm
17 Ground CVBS output	
18 Ground CVBS input	
19 CVBS output	1Vpp / 75ohm
20 CVBS input	1Vpp / 75ohm
21 Ground	

SCART 2 PINING

1 Audio right output	0.5Vrms / 1K
2 Audio right input	0.5Vrms / 10K
3 Audio left output	0.5Vrms / 1K
4 Ground AF	
5 Ground Blue	
6 Audio left input	0.5Vrms / 10K
7 Blue input	
8 AV switching input	0-12VDC /10K
9 Ground Green	
10 -	
11 -	
12 -	
13 Ground Red	
14 Ground Blanking	
15 -	
16 -	
17 Ground CVBS output	
18 Ground CVBS input	
19 CVBS output	1Vpp / 75ohm
20 CVBS input	1Vpp / 75ohm
21 Ground	

1. INTRODUCTION

11AK37 is a 110° chassis capable of driving 25", 28", 29", 33" 4:3 and 28", 32" 16:9 tubes at the appropriate currents. The chassis is capable of operating in PAL, SECAM and NTSC standards and multiple transmission standards as B/G, D/K, I/I', and L/L´. standards. The sound system is capable of giving 12 watts RMS output into a load of 8 ohms. One page, 7 page SIMPLETEXT, TOPTEXT, FASTTEXT and US Closed Caption is also provided. The chassis is equipped with a double-deck 42 pin scart connector for AV input/output, front-AV input, one back-AV output, one SVHS, one headphone and one subwoofer.

2. SMALL SIGNAL PART WITH STV2248:

STV2248 video processor is essential for realizing all small signal functions for a color TV receiver.

2.1 Vision IF amplifier

The vision IF amplifier can demodulate signals with positive and negative modulation. The PLL demodulator is completely alignment-free. Although the VCO (Toko-coil) of the PLL circuit is external, yet the frequency is fixed to the required value by the original manufacturer thus the Toko-coil does not need to be adjusted manually. The setting of the various frequencies (38.9 or 45.75 MHz) can be made via changing the coil itself.

2.2 QSS Sound circuit (QSS versions)

The sound IF amplifier is similar to the vision IF amplifier and has an external AGC de-coupling capacitor. The single reference QSS mixer is realised by a multiplier. In this multiplier the SIF signal is converted to the inter-carrier frequency by mixing it with the regenerated picture carrier from the VCO. The mixer output signal is supplied to the output via a high-pass filter for attenuation of the residual video signals. With this system a high performance hi-fi stereo sound processing can be achieved. The AM sound demodulator is realised by a multiplier. The modulated sound IF signal is multiplied in phase with the limited SIF signal. The demodulator output signal is supplied to the output via a low-pass filter for attenuation of the carrier harmonics. The AM signal is supplied to the output via the volume control.

The AM demodulated signal results from multiplying the input signal by itself, it is available on AM/FM output.

2.3 FM demodulator and audio amplifier (mono versions):

The FM demodulator is realized as narrow-band PLL with external loop filter, which provides the necessary selectivity without using an external band-pass filter. To obtain a good selectivity a linear phase detector and constant input signal amplitude are required. For this reason the inter-carrier signal is internally supplied to the demodulator via a gain controlled amplifier and AGC circuit. The nominal frequency of the demodulator is tuned to the required frequency (4.5/5.5/6.0/6.5 MHz) by means of a calibration circuit that uses the clock frequency of the µ-controller/Teletext decoder as a reference. The setting to the wanted frequency is realized by means of the software. It can be read whether the PLL frequency is inside or outside the window and whether the PLL is in lock or not. With this information it is possible to make an automatic search system for the incoming sound frequency. This is realized by means of a software loop that alternate the demodulator to various frequencies, then select the frequency on which a lock condition has been found. De-emphasis output signal amplitude is independent of the TV standard and has the same value for a frequency deviation of ±25 kHz at the 4.5 MHz standard and for a deviation of ±50 kHz for the other standards. When the IF circuit is switched to positive modulation the internal signal on de-emphasis pin is automatically muted. The audio control circuit contains an audio switch and volume control.

In the mono inter-carrier sound versions the Automatic Volume Leveling (AVL) function can be activated. The pin to which the external capacitor has to be connected depends on the IC version.

2.4 Video switching

The video processor (STV2248C) has three CVBS inputs and two RGB inputs. The first CVBS input is used for external CVBS from SCART 1, the second is used for either CVBS or Y/C from either SCART2 or BAV/FAV or SVHS, and the third one is used for internal video. The selection between both external video inputs signals is realized by means of software and hardware switches.

2.5 Synchronization circuit

The video processor (STV224X) performs the horizontal and vertical processing. The external horizontal deflection circuit is controlled via the Horizontal output pulse (HOUT). The vertical scanning is performed through an external ramp generator and a vertical power amplifier IC controlled by the Vertical output pulse (VOUT).

The main components of the deflection circuit are:

• PLL1: the first phase locked loop that locks the internal line frequency reference on the CVBS input signal. It is composed of an integrated VCO (12 MHz) that requires the chroma reference frequency (4.43MHz or 3.58MHz crystal oscillator reference signal), a divider by 768, a line decoder, and a phase comparator.

• PLL2: The second phase locked loop that controls the phase of the horizontal output (Compensation of horizontal deflection transistor storage time variation). Also the horizontal position adjustment is also performed in PLL2.

• A vertical pulse extractor.

• A vertical countdown system to generate all vertical windows (vertical synchronization window, frame blanking pulses, 50/60Hz identification window...).

• Automatic identification of 50/60Hz scanning.

• PLL1 time constant control.

• Noise detector, video identification circuits, and horizontal coincidence detector.

• Vertical output stage including de-interlace function, vertical position control.

• Vertical amplitude control voltage output (combined with chroma reference output and Xtal 1 indication).

2.6 Chroma and luminance processing:

The chroma decoder is able to demodulate PAL, NTSC and SECAM signals.

The decoder dedicated to PAL and NTSC sub-carrier is based on a synchronous demodulator, and an Xtal PLL locked on the phase reference signal (burst).

The SECAM demodulation is based on a PLL with automatic calibration loop.

The color standard identification is based on the burst recognition.

Automatic and forced modes can be selected through the I^2C bus.

NTSC tint, and auto flesh are controlled through I^2C bus.

Xtal PLL can handle up to 3 crystals to work in PAL M, PAL N and NTSC M for South America.

ACC an ACC overload control the chroma sub-carrier amplitude within 26dB range. Both ACC s are based on digital systems and do not need external capacitor.

All chroma filters are fully integrated and tuned via a PLL locked on Xtal VCO signal.

A second PLL is used for accurate fine-tuning of the SECAM bell filter. This tuning is achieved during the frame blanking. An external capacitor memorizes the bell filter tuning voltage.

A base-band chroma delay-line rebuilds the missing color line in SECAM and removes transmission phase errors in PAL.

The base-band chroma delay line is clocked with 6MHz signal provided by the horizontal scanning VCO.

The luminance processor is composed of a chroma trap filter, a luminance delay line, a peaking function with noise coring feature, a black stretch circuit.
Trap filter and luminance delay lines are achieved with the use of bi-quad integrated filters, auto-aligned via a master filter phase locked loop.

2.7 RGB output circuit:
The video processor performs the R, G, B processing.
There are three sources:
1. Y,U,V inputs (coming from luma part (Y output), and chroma decoder outputs (R-Y, B-Y outputs).
2. External R,G,B inputs from SCART (converted internally in Y,U,V), with also the possibility to input YUV signals from a DVD player, (YUV specification is Y=0.7 V PP , U= 0.7 V PP , V = 0.7V PP for 100% color bar).
3. Internal R,G,B inputs (for OSD and Teletext display)

The main functions of the video part are:
- Y,U,V inputs with integrated clamp loop, allowing a DC link with YUV outputs,
- External RGB inputs (RGB to YUV conversion), or direct YUV inputs,
- Y,U,V switches,
- Contrast, saturation, brightness controls,
- YUV to RGB matrix,
- OSD RGB input stages (with contrast control),
- RGB switches,
- APR function,
- DC adjustment of red and green channels,
- Drive adjustments (R, G, B gain),
- Digital automatic cut-off loop control,
- Manual cut-off capability with I^2C adjustments,
- Half tone, oversize blanking, external insertion detection, blue screen,
- Blanking control and RGB output stages.

2.8 µ-Controller
The ST92195 is the micro-controller, which is required for a color TV receiver. ST92195D1 is the version with one page Teletext and ST92195D7 is the one with 7 page Teletext. The IC has the supply voltages of 5 V and they are mounted in PSDIP package with 56 pins.
µ-Controller has the following features
- Display of the program number, channel number, TV Standard, analogue values, sleep timer, parental control and mute is done by OSD
- Single LED for standby and on mode indication
- System configuration with service mode
- 3 level logic output for SECAM and Tuner band switching

3. TUNER
Either a PLL or a VST tuner is used as a tuner.

UV1316 (VHF/UHF) is used as a PLL tuner. For only PAL M/N, NTSC M applications UV 1336 is used as the PLL tuner. UV 1315 (VHF/UHF) is used as a VST Tuner.

Channel coverage of UV1316:

BAND	OFF-AIR CHANNELS		CABLE CHANNELS	
	CHANNELS	FREQUENCY RANGE (MHz)	CHANNELS	FREQUENCY RANGE (MHz)
Low Band	E2 to C	48.25 to 82.25 **(1)**	S01 to S08	69.25 to 154.25
Mid Band	E5 to E12	175.25 to 224.25	S09 to S38	161.25 to 439.25
High Band	E21 to E69	471.25 to 855.25 **(2)**	S39 to S41	447.25 to 463.25

(1). Enough margin is available to tune down to 45.25 MHz.
(2). Enough margin is available to tune up to 863.25 MHz.

Noise	Typical	Max.	**Gain**	Min.	Typical	Max.
Low band :	5dB	9dB	All channels :	38dB	44dB	52dB
Mid band :	5dB	9dB	Gain Taper (of-air channels):			8dB
High band :	6dB	9dB				

Channel Coverage UV1336:

BAND	CHANNELS	FREQUENCY RANGE (MHz)
Low Band	2 to D	55.25 to 139.25
Mid Band	E to PP	145.25 to 391.25
High Band	QQ to 69	397.25 to 801.25

Noise is typically 6dB for all channels. **Gain** is minimum 38dB and maximum 50dB for all channels.

Channel Coverage of UV1315:

BAND	OFF-AIR CHANNELS		CABLE CHANNELS	
	CHANNELS	FREQUENCY RANGE (MHz)	CHANNELS	FREQUENCY RANGE (MHz)
Low Band	E2 to C	48.25 to 82.25 **(1)**	S01 to S10	69.25 to 168.25
Mid Band	E5 to E12	175.25 to 224.25	S11 to S39	231.25 to 447.25
High Band	E21 to E69	471.25 to 855.25 **(2)**	S40 to S41	455.25 to 463.25

(1). Enough margin is available to tune down to 45.25 MHz.
(2). Enough margin is available to tune up to 863.25 MHz.

Noise	Typ.	Max.	**Gain**	Min.	Typ.	Max.
Low band	6dB	9dB	All Channels	38dB	44dB	50dB
Mid band	6dB	10dB	Gain Taper			8dB
High band	6dB	11dB	(off-air channels)			

4. MULTISTANDARD SOUND PROCESSOR

The MSP 34xxG is designed to perform demodulation of FM or AM-Mono TV sound. Three kinds of MSP's are used: MSP 3400G,MSP 3410G and MSP 3411G. The MSP 3400G is fully pin and software-compatible to the MSP 3410G, but is not able to decode NICAM. It is also compatible to the MSP 3411G,sound processor IC with virtual dolby sound.

5. SOUND OUTPUT STAGETDA7269A

The TDA7269A is a class AB dual Audio power amplifier, specially designed for high quality sound applications as Hi-Fi music centers and TV sets. It is supplied by ±12VDC coming from two separate windings in the SMPS transformer.It gives 2x14W(THD=10%) output power into an 8ohm load.

6. VERTICAL OUTPUT STAGE WITH STV9306

The STV9306 is a fully I^2C controlled vertical deflection IC designed for use in 110°, 4/3 or 16/9 CRT applications. It integrates both the vertical deflection and E/W correction circuitries necessary in design of a 110° chassis.

7. VIDEO OUTPUT AMPLIFIER STV5112

The STV5112 consists of three monolithic video output amplifiers. The amplifier can be seen as an operational amplifier with negative feedback. The advantage of negative feedback is that the amplifier characteristics do not play an important role up to certain frequencies. The internal flash diodes protect the amplifiers against flash over in the picture tube. The only protections required at the cathode outputs are a flash resistor and a spark gap.
Furthermore, the device has a high voltage power supply (VDD) and a low voltage one (VCC).

8. POWER SUPPLY (SMPS)

The DC voltages required at various parts of the chassis are provided by an SMPS transformer controlled by the IC MC44608 which is designed for driving, controlling and protecting switching transistor of SMPS. The transformer produces 150V for FBT input, ±12V for audio output IC, +5V and +8V for ST92195.

9. POWER FACTOR CORRECTION

Passive components are used for the solution of power factor correction.

10. SERIAL ACCESS CMOS 8K EEPROM 24C08

The 24C08 is a 8Kbit electrically erasable programmable memory (EEPROM), organized as 4 blocks of 256*08 bits. The memory is compatible with the I^2C standard, two wire serial interface which uses a bi-directional data bus and serial clock.

11. CLASS AB STEREO HEADPHONE DRIVER TDA1308

The TDA1308 is an integrated class AB stereo headphone driver contained in a DIP8 plastic package.

12. CLASS AB MONO SUBWOOFER DRIVER TDA7261

The TDA7261 is a class AB dual Audio power amplifier, specially designed for high quality sound applications in mono TV chassis. It is supplied by ±12VDC.

13. SAW FILTERS

Saw filter type:	**Model:**
G1975M:	PAL B/G MONO
K2966M:	PAL SECAM B/G/D/K/I MONO
J1981 :	PAL-I MONO
K2958M:	PAL-SECAM B/G-D/K (38) MONO
K2962M:	PAL-SECAM B/G/D/K/I/L/L' MONO
L9653M:	SECAM L/L' AM MONO (AUDIO IF)
G3967M:	PAL-SECAM B/G STEREO (VIDEO IF)
G9353M:	PAL-SECAM B/G STEREO (AUDIO IF)
K3958M:	PAL-SECAM B/G/D/K/I/L/L' STEREO (VIDEO IF)
K9356M:	PAL-SECAM B/G/D/K/I STEREO (AUDIO IF)
K9656M:	PAL-SECAM B/G/D/K/I/L/L' STEREO (AUDIO IF)
K3958M:	PAL I NICAM (VIDEO IF)
K9356M:	PAL I NICAM (AUDIO IF)
M1962M:	PAL M/N NTSC M MONO
M3953M:	PAL M/N NTSC M STEREO (VIDEO IF)
M9370M:	PAL M/N NTSC M STEREO (AUDIO IF)

IC DESCRIPTIONS AND INTERNAL BLOCK DIAGRAM

- ST92195
- STV224X
- TUNER (UV1315, UV1316, UV1336)
- TDA7269A
- STV9306
- STV5112
- MC44608
- MSP 34XXG
- 24C08
- TDA1308
- SAW FILTERS

G1975M, K2966M, K2962M, L9653M, G3962M, G9353M, K3958M, K9356M, K9656M, K6263K, K9652M,M1962M, M3953M, M9370M

ST92195

The ST92195 is a member of the ST9+ family of micro-controllers, completely developed and produced by SGS-THOMSON Microelectronics using a proprietary n-well HCMOS process. The nucleus of the ST92195 is the advanced Core, which includes the Central Processing Unit (CPU), the ALU, the Register File and the interrupt controller. The Core has independent memory and register buses to add to the efficiency of the code. A set of on-chip peripherals form a complete system for TV set and VCR applications:

– Voltage Synthesis
– VPS/WSS Slicer
– Teletext Slicer
– Teletext Display RAM
– OSD

Additional peripherals include a watchdog timer , a serial peripheral interface (SPI), a 16-bit timer and an A/D converter.

MICROCONTROLLER PIN DESCRIPTION

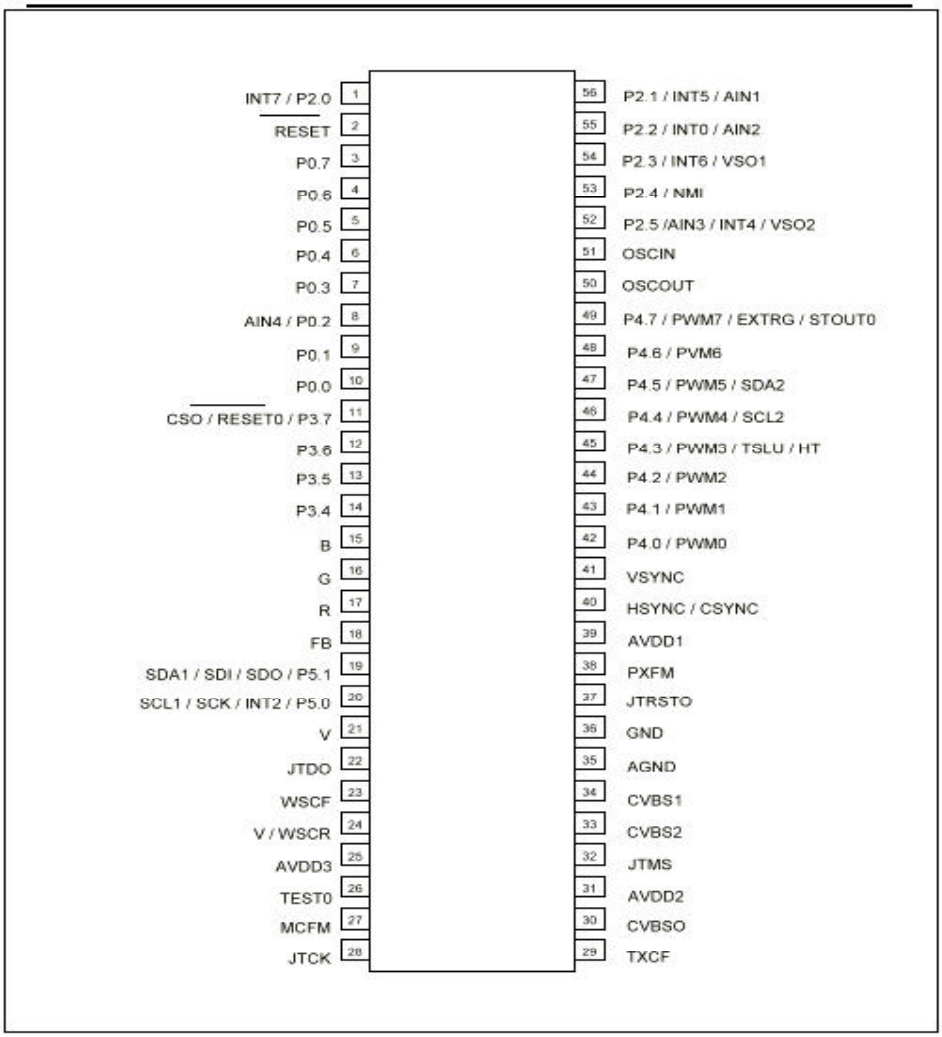

STV224X Video processor:

The STV2246/2247/2248 are fully bus controlled ICs for TV including PIF, SIF, luma, chroma and deflection processing. Used with a vertical frame booster (TDA1771 or TDA8174 for 90° chassis, STV9306 for 110° chassis), they allow the design of multi-standard (BGDKIMNLL, PAL/ SECAM/NTSC) sets with very few external components and no manual adjustments.

PIN CONNECTIONS STV224X/8X (SDIP56)

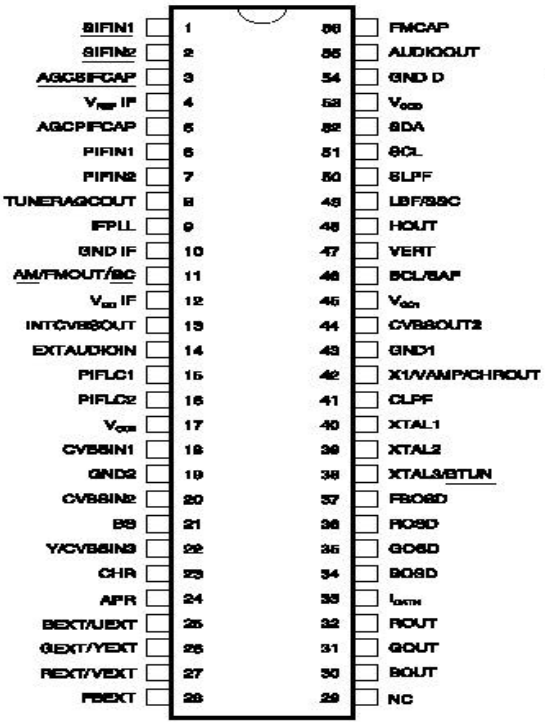

UV1315, UV1316, UV1336

General description of UV1315:

The UV1315 tuner belongs to the UV 1300 family of tuners, which are designed to meet a wide range of applications. It is a combined VHF, UHF tuner suitable for CCIR systems B/G, H, L, L', I and I'.

Features of UV1315:

- Member of the UV1300 family small sized UHF/VHF tuners
- Systems CCIR:B/G, H, L, L', I and I'; OIRT:D/K
- Voltage synthesized tuning (VST)
- Off-air channels, S-cable channels and Hyper-band
- Standardized mechanical dimensions and pinning

PINNING	PIN VALUE
1. Gain control voltage (AGC)	:4.0V, Max:4.5V
2. Tuning voltage	
3. High band switch	:5V, Min:4.75V, Max:5.5V
4. Mid band switch	:5V, Min:4.75V, Max:5.5V
5. Low band switch	:5V, Min:4.75V, Max:5.5V
6. Supply voltage	:5V, Min:4.75V, Max:5.5V
7. Not connected	
8. Not connected	
9. Not connected	
10. Symmetrical IF output 1	
11. Symmetrical IF output 2	

Band switching table:

	Pin 3	Pin 4	Pin 5
Low band	0V	0V	+5V
Mid band	0V	+5V	0V
High band	+5V	0V	0V

General description of UV1316:

The UV1316 tuner belongs to the UV 1300 family of tuners, which are designed to meet a wide range of applications. It is a combined VHF, UHF tuner suitable for CCIR systems B/G, H, L, L', I and I'.

Features of UV1316:

- Member of the UV1300 family small sized UHF/VHF tuners
- Systems CCIR: B/G, H, L, L', I and I'; OIRT: D/K
- Digitally controlled (PLL) tuning via I²C-bus
- Off-air channels, S-cable channels and Hyper-band
- World standardized mechanical dimensions and world standard pinning
- Complies to "CENELEC EN55020" and "EN55013"

PINNING	**PIN VALUE**
1. Gain control voltage (AGC)	:4.0V, Max:4.5V
2. Tuning voltage	
3. I²C-bus address select	:Max:5.5V
4. I²C-bus serial clock	:Min:-0.3V, Max:5.5V
5. I²C-bus serial data	:Min:-0.3V, Max:5.5V
6. Not connected	
7. PLL supply voltage	:5.0V, Min:4.75V, Max:5.5V
8. ADC input	
9. Tuner supply voltage	:33V, Min:30V, Max:35V
10. Symmetrical IF output 1	
11. Symmetrical IF output 2	

General description of UV1336:

UV1336 series is developed for reception of channels broadcast in accordance with the M, N standard.

Features of UV1336:

- Global standard pinning
- Integrated Mixer-Oscillator & PLL function
- Conforms to CISPR 13, FCC and DOC (Canada) regulations
- Low power consumption
- Both phono connector and 'F' connector are available

PINNING	**PIN VALUE**
1. Gain control voltage	:4.0V, Max:4.5V
2. Tuning voltage	
3. Address select	Max:5.5V
4. Serial clock	:Min:-0.3V, Max:5.5V
5. Serial data	:Min:-0.3V, Max:5.5V
6. Not connected	
7. Supply voltage	:5.0V, Min:4.75V, Max:5.5V
8. ADC input (optional)	
9. Tuning supply voltage	:33V, Min:30V, Max:35V
10. Ground	

11. IF output

TDA7269A

General Description of TDA7269A

The TDA7269A is a class AB dual Audio power amplifier, specially designed for high quality sound applications as Hi-Fi music centers and TV sets. Requires very few external components.

- Wide supply voltage range up to ±20V
- Split supply
- High output power; 14 + 14W @THD =10%, R_L =8W,V_S= ±16V
- No pop at turn-on/off
- Mute (Pop free)
- Stand-by feature
- Thermal overload protection
- Short circuit protection to gnd

PINNING

1	- V_S
2	Output1
3	+ V_S
4	Output2
5	Mute
6	- V_S
7	In+(2)
8	In-(2)
9	Gnd
10	In-(1)
11	In+(1)

STV9306

General description:

The STV9306 is a fully I^2C controlled vertical deflection IC designed for use in 110°, 4/3 or 16/9 CRT applications. It integrates both the vertical deflection and E/W correction circuitries necessary in design of a 110° chassis.

FEATURES

- FULLY I^2C CONTROLLED
- DMOS POWER HALF-BRIDGE AMPLIFIER
- DC COUPLED OPERATION
- INTERNAL FLYBACK GENERATOR (UP TO 60V)
- SELF ADAPTED SAWTOOTH (50/60Hz)
- 100Hz OPERATION
- VERTICAL LINEARITY, AMPLITUDE AND CENTERING ADJUSTMENTS
- HORIZONTAL WIDTH, PINCUSHION, TRAPEZOID AND CORNER ADJUSTMENTS
- BREATHING CORRECTION
- 4/3, 16/9 CRT APPLICATION
- THERMAL PROTECTION
- LINEAR VERTICAL ZOOM FUNCTION
- E/W CLASS A OUTPUT
- LOW EXTERNAL COMPONENTS

PINNING

1.	SCL
2.	CRAMP
3.	SDA
4.	CHOLD
5.	SYNC
6.	Vs
7.	FLYBACK
8.	GND
9.	OUT
10.	VOPS
11.	EWOUT
12.	SENS2
13.	EWFB
14.	SENS1
15.	BREATHING

STV5112

General Description:

The STV5112 includes three video amplifiers designed with a high voltage bipolar/CMOS/DMOS technology (BCD). It drives directly the three cathodes and is protected against flashovers. Thanks to its three cathode current outputs, the STV5112 can be used with both parallel and sequential sampling applications.

Bandwidth: 8MHz TYPICAL
Supply Voltage: 220V typical
Rise and fall time: 50ns typical
CRT cathode current outputs for parallel or sequential cut-off or drive adjustment
Flashover protection
Power dissipation: 3.6W

PINNING	**PIN VALUE**
1.	BLUE INPUT
2.	VCC LOW VOLTAGE
3.	GREEN INPUT
4.	RED INPUT
5.	VDD HIGH VOLTAGE
6.	RED CATHODE CURRENT
7.	RED OUTPUT
8.	GROUND
9.	RED FEEDBACK
10.	GREEN OUTPUT
11.	GREEN CATHODE CURRENT
12.	GREEN FEEDBACK
13.	BLUE OUTPUT
14.	BLUE CATHODE
15.	BLUE FEEDBACK

MC44608

General description:

The MC44608 is a high performance voltage-mode controller designed for off–line converters. This high voltage circuit that integrates the start–up current source and the oscillator capacitor, requires few external components while offering a high flexibility and reliability.The device also features a very high efficiency stand–by management consisting of an effective Pulsed Mode operation. This

technique enables the reduction of the stand–by power consumption to approximately 1W while delivering 300mW in a 150W SMPS.
• Integrated start–up current source
• Loss less off–line start–up
• Direct off–line operation
• Fast start–up

General Features
• Flexibility
• Duty cycle control
• On chip oscillator switching frequency 40, or 75kHz
• Secondary control with few external components

Protections
• Maximum duty cycle limitation
• Cycle by cycle current limitation
• Demagnetization (Zero current detection) protection
• "Over VCC protection" against open loop
• Programmable low inertia over voltage protection against open loop
• Internal thermal protection

GreenLine Controller
• Pulsed mode techniques for a very high efficiency low power mode
• Lossless startup
• Low dV/dT for low EMI radiations

PINNING	**PIN VALUE**
1. Demagnetization	Zero cross detection voltage: 50-mV typ.
2. I Sense	Over current protection voltage 1V typ.
3. Control Input	Min: 7.5V Max.: 18V
4. Ground	Iout $2A_{p-p}$ during scan $1.2A_{p-p}$ during flyback
5. Driver	Output resistor 8.5 Ohm sink 15 Ohm source typ.
6. Supply voltage	Max:16V (Operating range 6.6V-13V)
7. No connection	
8. Line Voltage	Min:50V Max:500V

MSP 34XXG

General description:

The MSP 34xxG family of single-chip Multi-standard Sound Processors covers the sound processing of all analog TV standards worldwide, as well as the NICAM digital sound standards. The full TV sound processing, starting with analog sound IF signal-in, down to processed analog AF-out, is performed on a single chip.

Two-carrier FM systems according to the German or Korean terrestrial specs or the satellite specs can be processed with the MSP 34x0G. Digital demodulation and decoding of NICAM-coded TV stereo sound, is done only by the MSP 3410G. The MSP 34x0G offers a powerful feature to calculate the carrier field strength, which can be used for automatic standard detection (terrestrial) and search algorithms (satellite).

The MSP 3411G has all functions of the MSP34x0G with the addition of a virtual surround sound feature. Surround sound can be reproduced to a certain extent with two loudspeakers. The MSP3411G includes our virtualizer algorithm "3D-PANORAMA" which has been approved by the Dolby Laboratories for compliance with the "Virtual Dolby Surround" technology. In addition, the MSP 34x1G includes our "PANORAMA" algorithm. The MSP34x1G has built-in automatic functions: The IC is able to detect the actual sound standard automatically (Automatic Standard

Detection). Furthermore, pilot levels and identification signals can be evaluated internally with subsequent switching between mono/ stereo/bilingual; no I^2C interaction is necessary (Automatic Sound Selection).

General Features

- Two selectable analog inputs (TV and SAT-IF sources)
- Automatic Gain Control (AGC) for analog IF input. Input range: 0.10–3 V pp
- Integrated A/D converter for sound-IF inputs
- All demodulation and filtering is performed on chip and is individually programmable
- Easy realization of all digital NICAM standards (B/G, D/K, I & L) with MSP 3410G.
- FM demodulation of all terrestrial standards (incl. identification decoding)
- FM demodulation of all satellite standards
- No external filter hardware is required
- Only one crystal clock (18.432 MHz) is necessary
- FM carrier level calculation for automatic search algorithms and carrier mute function
- Subwoofer output with on-chip programmable low-pass and complementary high-pass filters

DSP Section (Audio Base band Processing)

- Flexible selection of audio sources to be processed
- Two digital input and one output interface via I 2 S bus for external DSP processors, featuring surround sound, ADR etc.
- Digital interface to process ADR (ASTRA Digital Radio) together with DRP 3510A
- Performance of all de-emphasis systems including adaptive Wegener Panda 1 without external components or controlling
- Digitally performed FM identification decoding and de-matrixing
- Digital base-band processing: volume, bass, treble, 5-band equalizer, loudness, pseudo-stereo, and base-width enlargement
- Simple controlling of volume, bass, treble, equalizer etc.

Analog Section

- four selectable analog pairs of audio base-band inputs (= four SCART inputs) input level: =<2 V RMS , input impedance: >=25 kΩ
- one analog mono input (i.e. AM sound): input level: =<2 V RMS , input impedance: >=15 kΩ
- two high-quality A/D converters, S/N-Ratio: >=85 dB
- 20 Hz to 20 kHz bandwidth for SCART-to-SCART copy facilities

24CO8

General description:

The 24C16 is a 8Kbit electrically erasable programmable memory (EEPROM), organized as 4 blocks of 256 * 08 bits. The memory operates with a power supply value as low as 2.5V.

Features:

- Minimum 1 million ERASE/WRITE cycles with over 10 years data retention
- Single supply voltage:4.5 to 5.5V
- Two wire serial interface, fully I²C-bus compatible
- Byte and Multi-byte write (up to 8 bytes)
- Page write (up to 16 bytes)
- Byte, random and sequential read modes
- Self timed programming cycle

PINNING	PIN VALUE	
1. Write protect enable	:0V	
2. Not connected	:0V	
3. Chip enable input	:0V	
4. Ground	:0V	
5. Serial data address input/output	:Input LOW voltage:	Min:-0.3V, Max:0.3*Vcc
	:Input HIGH voltage:	Min:0.7*Vcc, Max:Vcc+1
6. Serial clock	:Input LOW voltage:	Min:-0.3V, Max:0.3*Vcc
	:Input HIGH voltage:	Min:0.7*Vcc, Max:Vcc+1
7. Multibyte/Page write mode	:Input LOW voltage:	Min:-0.3V, Max:0.5V
	:Input HIGH voltage:	Min:Vcc-0.5, Max:Vcc+1
8. Supply voltage	:Min:2.5V, Max:5.5V	

TDA1308

Features:

- Wide temperature range
- Excellent power supply ripple rejection
- Low power consumption
- Short-circuit resistant
- High performance
- high signal-to-noise ratio
- low distortion

PINNING	PIN VALUE
1. Output A (Voltage swing)	:Min:0.75V, Max:4.25V
2. Inverting input A	:Vo(clip):Min:1400mVrms
3. Non-inverting input A	:2.5V
4. Ground	:0V
5. Non-inverting input B	:2.5V
6. Inverting input B	:Vo(clip):Min:1400mVrms
7. Output B (Voltage swing)	:Min:0.75V, Max:4.25V
8. Positive supply	:5V, Min:3.0V, Max:7.0V

TDA7261

General Description of TDA7261

The TDA7261 is a class AB dual Audio power amplifier, specially designed for high quality sound applications in mono TV sets.

– Wide supply voltage range up to 50V ABS max.
– Split supply
– High output power;25W @THD =10%, R_L =8W,V_S= ±20V
– No pop at turn-on/off
– Mute (Pop free)
– Stand-by feature
– Thermal overload protection
– Short circuit protection to gnd

PINNING

1. N.C.
2. + V_S
3. Output
4. Mute/Stby
5. - V_S
6. In
7. GND
8. N.C.

Saw filter's list:

		VIDEO	AUDIO
MONO	PAL BG	G1975M	
	PSBG DK	K2966M	
	PAL II'	J1981	
	PSBGDKK' II'	K2966M	
	PSBGDKK' LL'	K2962M	L9653

		VIDEO	AUDIO
STR	PAL BG	G3967M	G9353M
	PAL II'	K3958M	K9356
	PSBGDKK' II'	K3958M	K9356
	PSBGDKK' LL'	K3958M	K9656

PINNING

1. Input
2. Input-ground
3. Chip carrier-ground
4. Output
5. Output

K9656M, L9653M

PINNING

1. Input
2. Switching Input
3. Chip carrier-ground
4. Output
5. Output

GENERAL BLOCK DIAGRAM of 11AK37

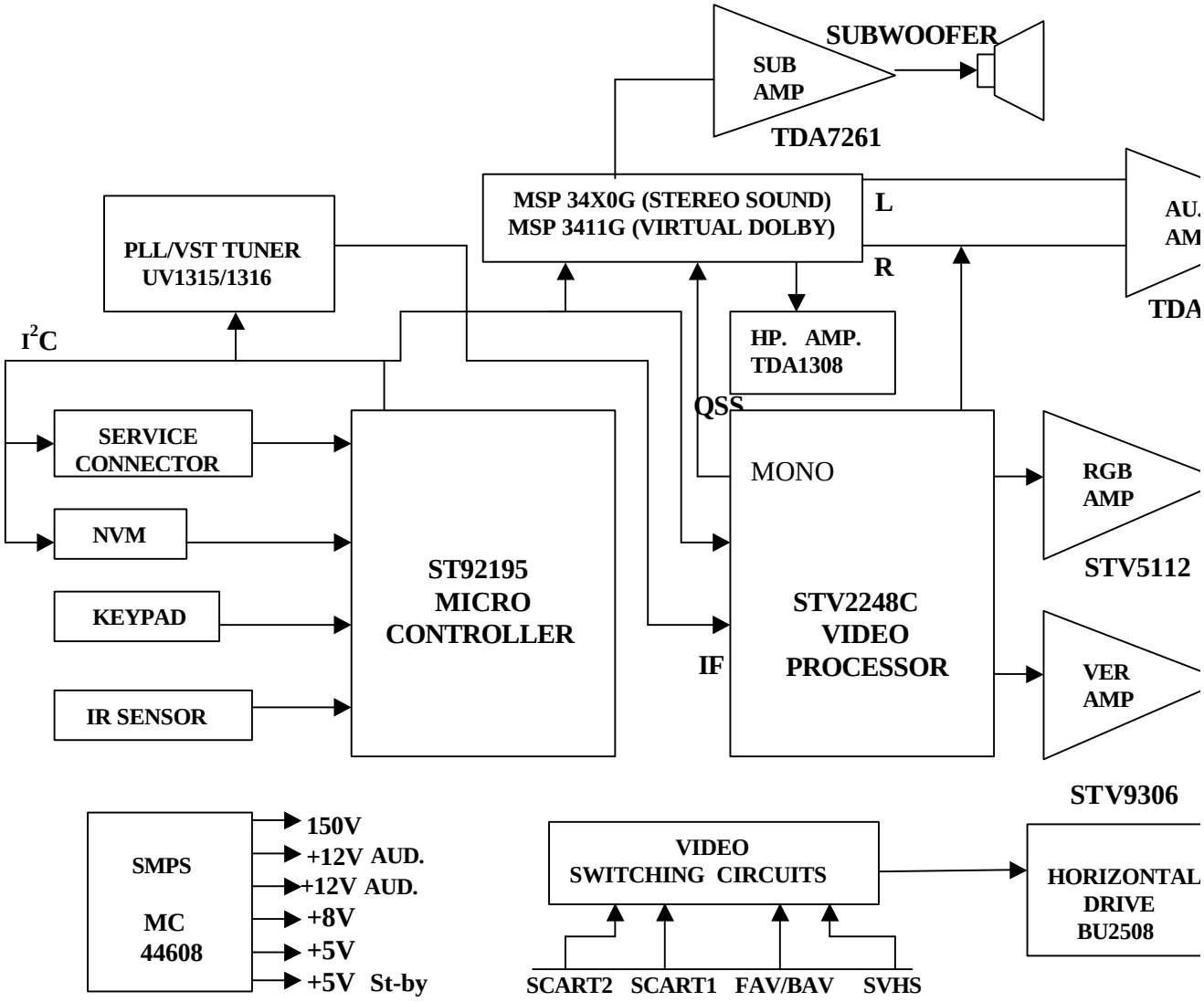

AK37/TITANIUM SERVICE MENU

SERVICE ADJUSTMENTS

	Parameter	Notes
OSD	OSD Horizontal Position	
IF1	IF Coarse Adjust	
IF2	IF Fine Adjust	
IF3	IF Coarse Adjust for L-Prime	
IF4	IF Fine Adjust for L-Prime	
AGC	Automatic Gain Control	
VLIN	Vertical Linearity	
VS1A	Vertical Size for 50 Hz / 4:3 (AK30)	
VS1B	Vertical Size for 50 Hz / 16:9 (AK30)	
VP1	Vertical Position for 50 Hz (AK30)	
HP1	Horizontal Position for 50 Hz (AK30)	
VS2A	Vertical Size for 60 Hz / 4:3 (AK30)	
VS2B	Vertical Size for 60 Hz / 16:9 (AK30)	
VP2	Vertical Position for 60 Hz (AK30)	
HP2	Horizontal Position for 60 Hz (AK30)	
RGBH	RGB Horizontal Shift Offset	CVBS – RGB Horizontal position compensation
VSOF	Vertical Size Offset for 60 Hz (AK37)	
VPOF	Vertical Position Offset for 60 Hz (AK37)	
HSOF	Horizontal Size Offset for 60 Hz (AK37)	
HPOF	Horizontal Position Offset for 60 Hz (AK37)	
HTOF	Horizontal Trap Correction Offset for 60 Hz (AK37)	
WR	White Point Adjust for RED	
WG	White Point Adjust for GREEN	
WB	White Point Adjust for BLUE	
BR	Bias for RED	
BG	Bias for GREEN	
APR	APR Threshold	
FMP1	FM Prescaler when AVL is OFF	STEREO ONLY
NIP1	NICAM Prescaler when AVL is OFF	STEREO ONLY
SCP1	SCART Prescaler when AVL is OFF	STEREO ONLY
FMP2	FM Prescaler when AVL is ON	STEREO ONLY

NIP2	NICAM Prescaler when AVL is ON	STEREO ONLY
SCP2	SCART Prescaler when AVL is ON	STEREO ONLY
S1V	SCART1 Volume	STEREO ONLY
S2V	SCART2 Volume	STEREO ONLY
F1H	High Byte of crossover frequency for VHF1-VHF3	Meaningful for only PLL Tuner
F1L	Low Byte of crossover frequency for VHF1-VHF3	Meaningful for only PLL Tuner
F2H	High Byte of crossover frequency for VHF3-UHF	Meaningful for only PLL Tuner
F2L	Low Byte of crossover frequency for VHF3-UHF	Meaningful for only PLL Tuner
BS1	Band Switch Byte for VHF1	Meaningful for only PLL Tuner
BS2	Band Switch Byte for VHF3	Meaningful for only PLL Tuner
BS3	Band Switch Byte for UHF	Meaningful for only PLL Tuner
CB	Control Byte	Meaningful for only PLL Tuner
OP1	Option 1 (see the Option List)	
OP2	Option 2 (see the Option List)	
OP3	Option 3 (see the Option List)	
OP4	Option 4 (see the Option List)	
OP5	Option 5 (see the Option List)	
TX1	Teletext Option 1 (see the Option List)	
GEOM	Geometry Option (see the Option List) (AK37)	

OPTION LIST

OP1 – Peripheral Options

7								NOT USED
	6							1, Display "AV-3" as "F-AV" 0, Display "AV-3" as "B-AV"
		5						1, Turn back TV mode after the last AV (with AV key) 0, Turn back first AV mode after the last AV
			4					1, SVHS is available in AV key stream 0, SVHS is NOT available in AV key stream
				3				1, RGB is available in AV key stream 0, RGB is NOT available in AV key stream
					2			1, AV-3 is available in AV key stream 0, AV-3 is NOT available in AV key stream
						1		1, AV-2 is available in AV key stream 0, AV-2 is NOT available in AV key stream
							0	1, AV-1 is available in AV key stream 0, AV-1 is NOT available in AV key stream

OP2 – Reception Standard Options

7								1, 3-button keyboard (V-, P+, V+) 0, 4/5 button keyboard (V-, V+, P-, P+, Menu)
	6							1, L/L 'is available 0, L/L 'is not available
		5						1, I is available 0, I is not available
			4					1, DK is available 0, DK is not available
				3				1, BG is available 0, BG is not available
					2			1, 3D PANORAMA is visible 0, DOLBY VIRTUAL is visible
						1		1, for SECAM LLP, EXT MONO INPUT is available 0, inner demodulation is available for SECAM LLP
							0	1, LOW POWER is available 0, LOW POWER is not available

OP3 – Video Options

7	6							Xtal Configuration 00, 1 Xtal PAL 4.43 01, 2 Xtal PAL/NTSC 4.43/3.58 10, 1 Xtal PAL/SEC/NTSC 4.43 11, 2 Xtal PAL/SEC/NTSC 4.43/3.58
		5						1, Enable Blue back when no signal in AV modes 0, No blue back in AV modes
			4					1, White Insertion is ON 0, White Insertion is OFF
				3				1, Blue Background when no signal 0, Disable Blue Background
					2			1, Semi-transparent background for menu 0, Solid Menu background for menu
						1		1, Black Stretch is ON 0, Black Stretch is OFF
							0	1, APR is ON 0, APR is OFF

OP4 – TV Features

7	6	5	4	3	2	1	0	
								1, Headphone is available (for STEREO models) 0, Headphone is not available
								1, Arabic/Persian is Available in Menu Languages (for A, D, E, F, and later) 0, Arabic/Persian is NOT Available in Menu Languages
								1, Hebrew is Available in Menu Languages (for A, D, E, F, and later) 0, Hebrew is NOT Available in Menu Languages
								1, Hotel Mode can be activated 0, Hotel Mode can not be activated
								1, No Signal Timer is enabled 0, No Signal Timer is disabled
								For PLL Tuner 1, Frequency based search 0, Channel table based search *(No meaning for for VST Tuner)*
								1, 3-band tuning (VHF1, VHF3, UHF) 0, 1-band tuning (only UHF)
								1, Extra 200 msec blanking for VST 0, no-extra blanking

OP5 – Channel Tables

7	6	5	4	3	2	1	0	
								1, Extra 150 msec blanking more for VST (if OP4.b0 = 1, to SECAM color problem) 0, no-extra blanking
								1, 'Programme" item in AUTOSTORE menu is visible 0, 'Programme" item in AUTOSTORE menu is invisible
								1, Force both channel on even no carrier (carrier mute disable) 0, Default value after reset
								1, French OS Channel Table is available 0, French OS Channel Table is not available
								1, French Channel Table is available 0, French Channel Table is not available
								1, England Channel Table is available 0, England Channel Table is not available
								1, East Europe Channel Table is available 0, East Europe Channel Table is not available
								1, West Europe Channel Table is available 0, West Europe Channel Table is not available

TX1 – Teletext Options

7								1, Auto APS after Stand-By 0, no APS after Stand-By
	6							RESERVED (must be 0)
		5	4	3				Teletext Language Groups 000, Group 1 – West (English, French, Swedish, Czech, German, Portuguese, Italien, Rumanian) 001, Group 2 – West/East (Polish, French, Swedish, Czech, German, Serbian, Italien, Rumanian) 010, Group 3 – West/Turkish (English, French, Swedish, Turkish, German, Portuguese, Italien, Rumanian) 011, Group 4 – East/Cyrillic (English, Cyrillic, Swedish, Czech, German, Serbian, Lettish, Rumanian) 100, Group 5 – Arabic (English, French, Swedish, Turkish, German, Hebrew, Italien, Arabic)
					2	1	0	Device type selection 000, EPROM M6 A 001, ROM H5 P 010, ROMLESS H5 P 011, EPROM M6 R 100, ROM M6 R 101, OSDEPROM M6 R 110, ROM M6 P 111, Read Auto Gain Table for the device from EEPROM

GEOM – Geometry Options (for AK37)

7								NOT USED
	6							1, SVHS audio input in FAV/BAV in 0, SVHS in AV2
		5						1, AK37 adjustment values are valid (default for AK37) 0, AK30 adjustment value are valid
			4					1, ZOOM mode is available 0, ZOOM mode is not available
				3				1, SUBTITLE mode is available 0, SUBTITLE mode is not available
					2			1, CINEMA mode is available 0, CINEMA mode is not available
						1		1, 14:9 mode is available 0, 14:9 mode is not available
							0	1, Tube Format16:9 0, Tube Format 4:3

TUNER SETTINGS

	VHF1-VHF3	VHF3-UHF	AK30 SERVICE MENU ITEMS				
	Frq. (Mhz)	Frq. (Mhz)	F1H	F1L	F2H	F2L	BS1
Philips UV1316S MK3	156,25 MHz	441,25 MHz	00001100	00110010	00011110	00000010	00000001
Thomson CTT5020	114,25 MHz	401,25 MHz	00001001	10010010	00011011	10000010	00000011
Samsung TECC2949PG28B	170,25 MHz	465,25 MHz	00001101	00010010	00011111	10000010	00000001
Samsung TECC2949PG35B	170,25 MHz	449,25 MHz	00001101	00010010	00011110	10000010	00000001
Alps TEDE9X226A	142,25 MHz	425,25 MHz	00001011	01010010	00011101	00000010	00000001
Alps TEDE9-004A	149,25 MHz	424,25 MHz	00001011	11000010	00011100	11110010	00000001

Explanations	
F1H	High byte of VHF1-VHF3 cross-over frequency
F1L	Low byte of VHF1-VHF3 cross-over frequency
F2H	High byte of VHF3-UHF cross-over frequency
F2L	Low byte of VHF3-UHF cross-over frequency
BS1	Band switching byte for VHF1
BS2	Band switching byte for VHF3
BS3	Band switching byte for UHF
CB	Control byte

AK37/TITANIUM – Languages Groups

GROUP 1 - WEST

- ENGLISH
- FRENCH
- SWEDISH
- CZECH
- GERMAN
- PORTUGUESE
- ITALIAN
- RUMANIAN

GROUP 2 – WEST / EAST

- POLISH
- FRENCH
- SWEDISH
- CZECH
- GERMAN
- SERBIAN
- ITALIAN
- RUMANIAN

GROUP 3 – WEST / TURKEY

- ENGLISH
- FRENCH
- SWEDISH
- TURKISH
- GERMAN
- PORTUGUESE
- ITALIAN
- RUMANIAN

GROUP 4 – EAST / CYRILLIC

- ENGLISH
- CYRILLIC
- SWEDISH
- CZECH
- GERMAN
- SERBIAN
- LETTISH
- RUMANIAN

GROUP 5 - ARABIC

- ENGLISH
- FRENCH
- SWEDISH
- TURKISH
- GERMAN
- HEBREW
- ITALIAN
- ARABIC

Using Remo te Control Buttons

RED : Is used to switch AVL to ON or OFF mode on service menu.
GREEN : Is used to enter the geometry menu.
YELLOW : Is used to prepare the system for screen adjustments.
BLUE : Is used for automatic IF and AGC adjustments.
TTX Update : Is used to change the picture mode.